Content

1. Power system
2. Controller system
3. Battery system
4. Transmission system
5. Frame system
6. Cabin system
7. Front suspension system
8. Rear suspension system
9. Steering system
10. Electrical system
11. Cooling system
12. Braking system
13. Tires

Power system

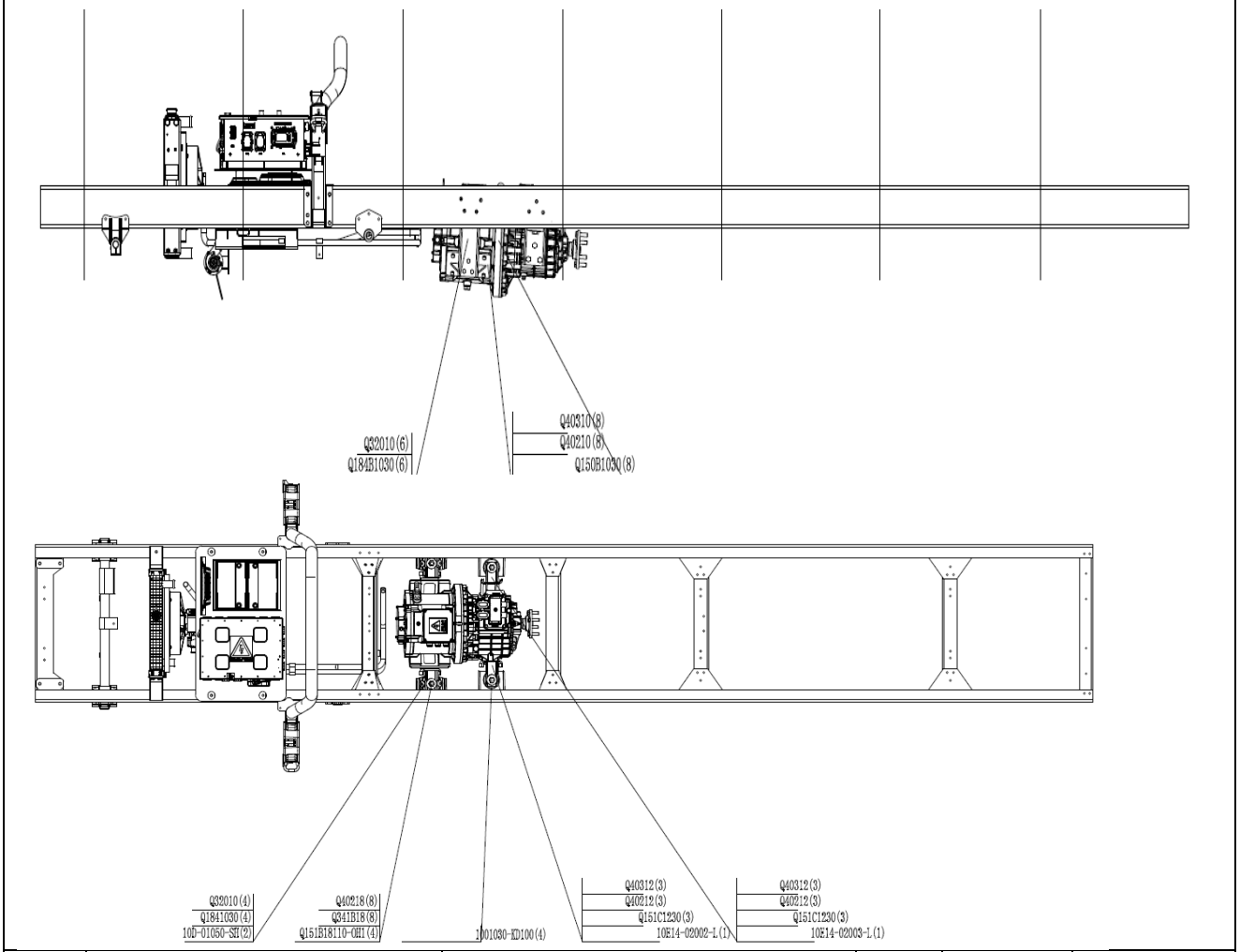

No.	Part No.	Part name	Qty.	Wearing Prt.	Remark
1	TZ260XSSFZ03	Driving motor	1		
2	10E14-02001-C	Front suspension bracket	2		
3	Q184B1030	Flange bolt	10		
4	Q32010	Flange nut	10		
5	10E14-05001	Connection bracket	2		
6	Q150B1030	Hexagon bolt-to fix connection bracket to motor	8		
7	Q40212	Plain washer-to fix front suspension bracket to motor	8		
8	Q40312	Spring washer-to fix front suspension bracket to motor	8		
9	10E14-02002-L	L. bracket, rear suspension	1		
10	10E14-02003-L	R. bracket, rear suspension	1		
11	Q151C1230	Hexagon bolt-to fix rear	6		

		suspension bracket to motor			
12	Q40212	Plain washer-to fix rear suspension bracket to motor	6		
13	Q40312	Spring washer-to fix rear suspension bracket to motor	6		
14	10D-01050-SH	Suspension cushion	2		
15	1001030-KD100	Suspension cushion	4		
16	Q151B18110-0H1	Hexagon bolt	4		
17	Q341B18	Hexagon nut	8		
18	Q40218	Big plain washer	8		

Driving motor

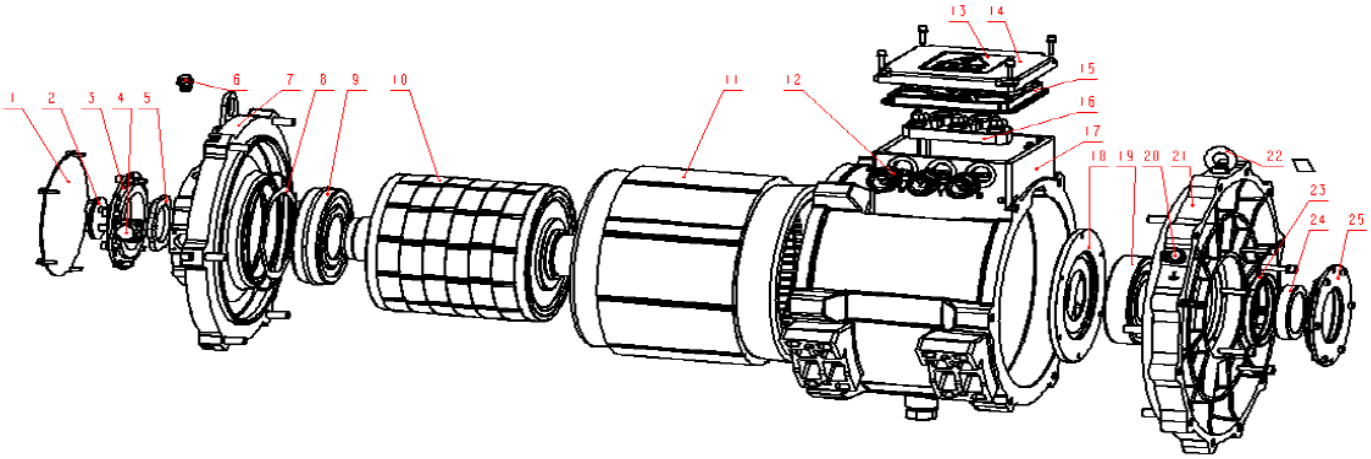

No.	Part No.	Part name	Qty.	Wearing Prt.	Remark
1		Rear end cover plate			
2		Resolving rotor press plate			
3		Resolving stator press plate			
4		Aerial plug			
5		Resolver			
6		Air ventilation valve			
7		Rear end cover			
8		Spring			
9		Bearing			
10		Rotor			
11		Stator			
12		Locking nut sleeve			
13		High voltage alarm sticker			
14		Junction box cover			
15		Seal gasket			
16		Terminal plate			
17		Seat			

18		Inner cover, front bearing			
19		Bearing			
20		Ground screw			
21		Front end cover			
22		Eyebolt			
23		Oil seal			
24		Bearing press sleeve			
25		Front end cover plate			

Gearbox

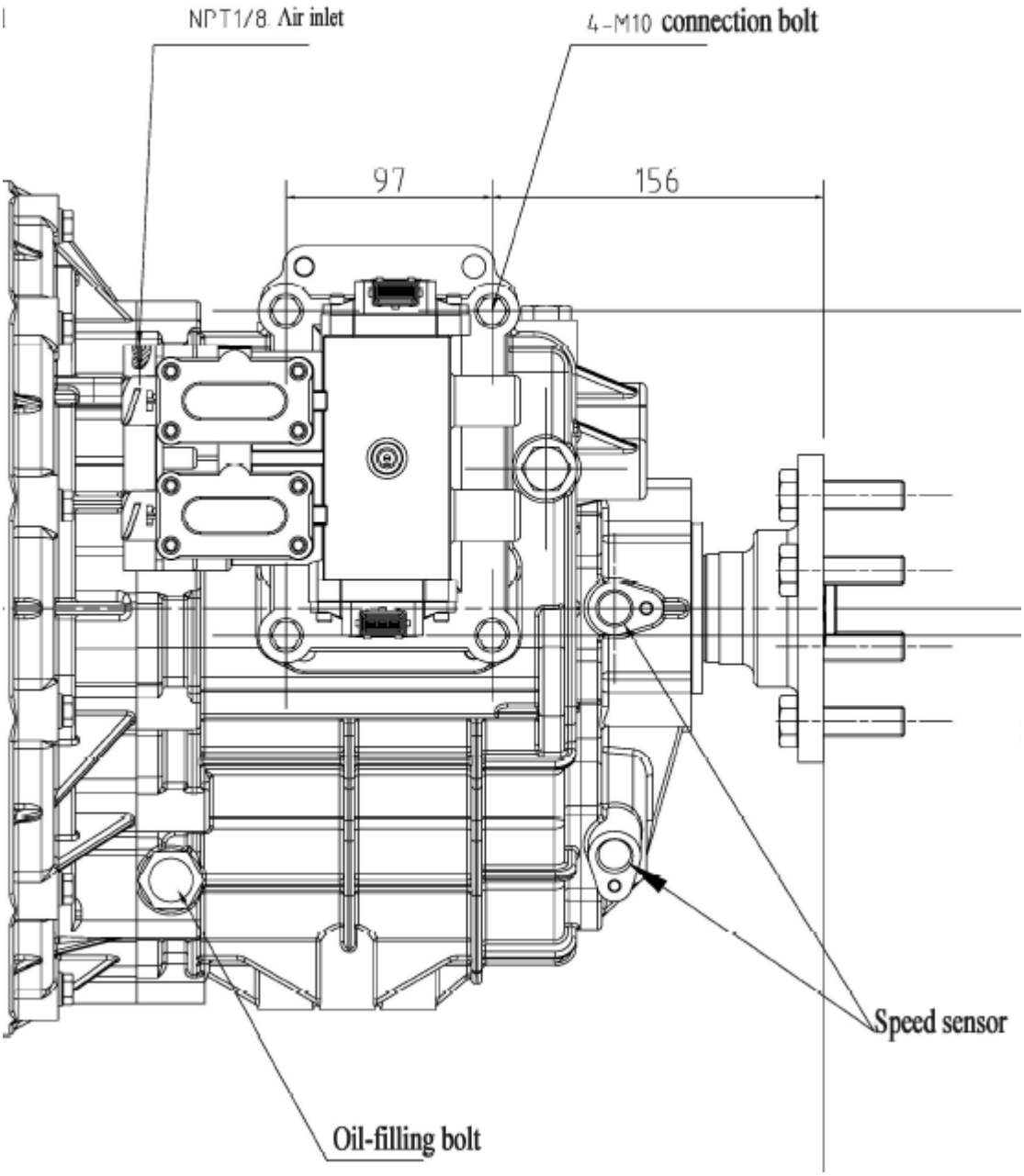

No.	Part No.	Part name	Qty.	Wearing Prt.	Remark
1		NPT1/8 air inlet			
2		4-M10 connection bolt			
3		Speed sensor			
4		Oil-filling bolt			

Controlling system

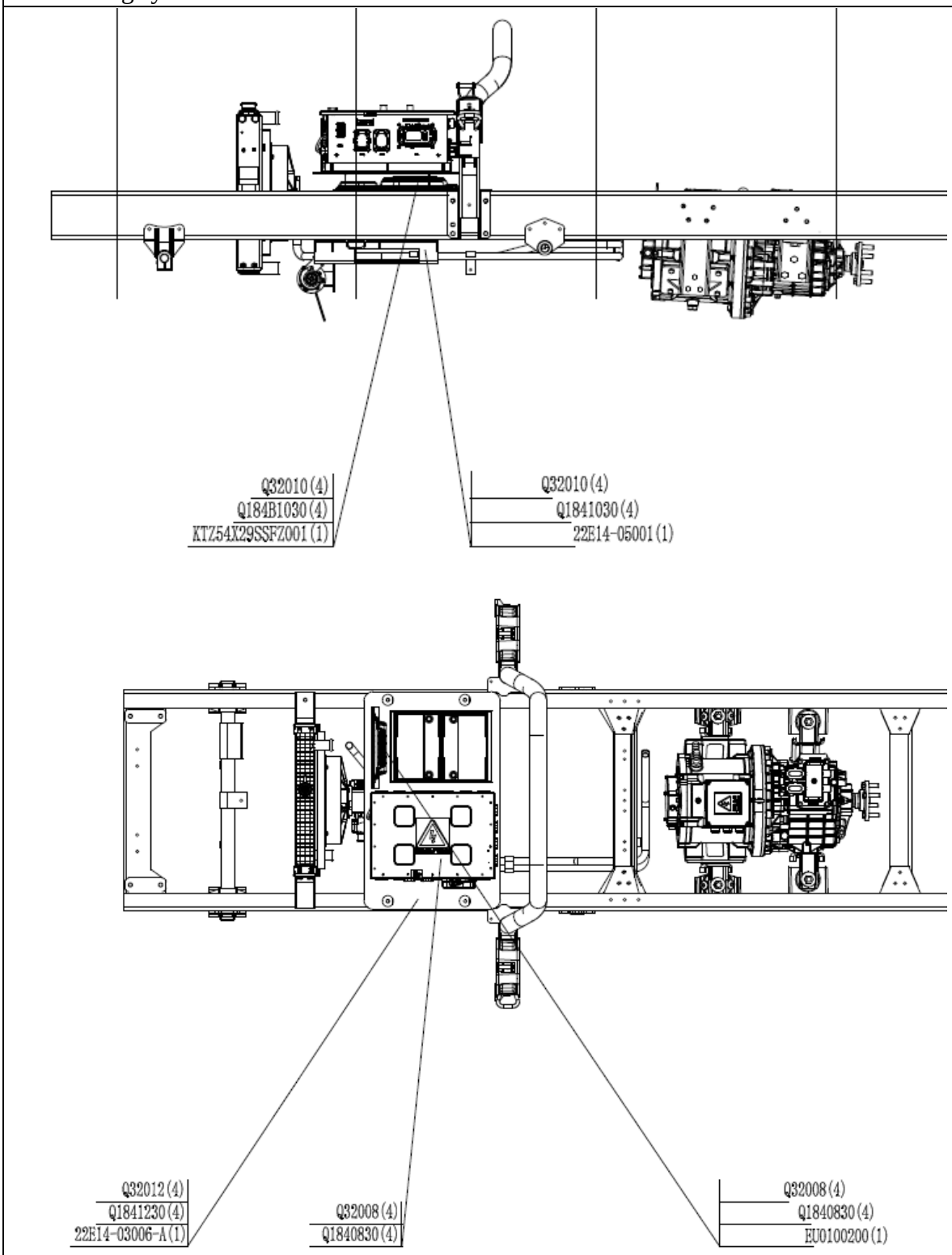

No.	Part No.	Part name	Qty.	Wearing Prt.	Remark
1	KTZ54X29SSFZ001	5-in-1 controller assy.	1		
2	22E14-05001	Lower bracket, controller	1		
3	22E14-03006-A	Upper bracket, controller	1		

4	Q1841030	Flange bolt	8		
5	Q32010	Flange nut	8		
6	Q1841230	Flange bolt	4		
7	Q32012	Flange nut	4		
8	Q1840830	Flange bolt	8		
9	Q32008	Flange nut	8		
10	EU0100200	VCU	1		

Controller

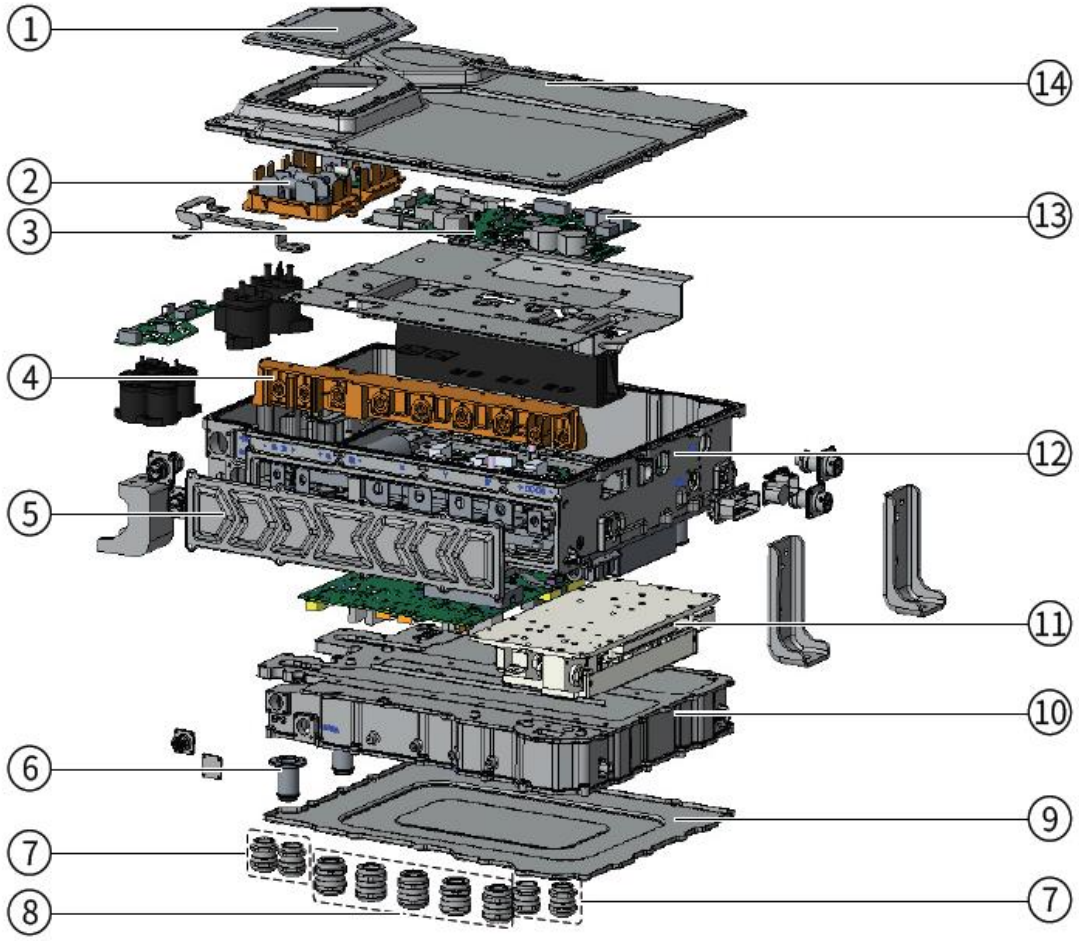

No.	Part No.	Part name	Qty.	Wearing Prt.	Remark
1		Fusebox cover plate			
2		Fuse			
3		HV chamber board			
4		Plug			
5		Cover plate, junction box			
6		Water mouth			
7		M25 waterproof plug			
8		M32 waterproof plug			
9		Lower cover plate			
10		Auxiliary case			
11		DCDC			
12		Main case			
13		TM control board			
14		Upper cover plate			

Controller

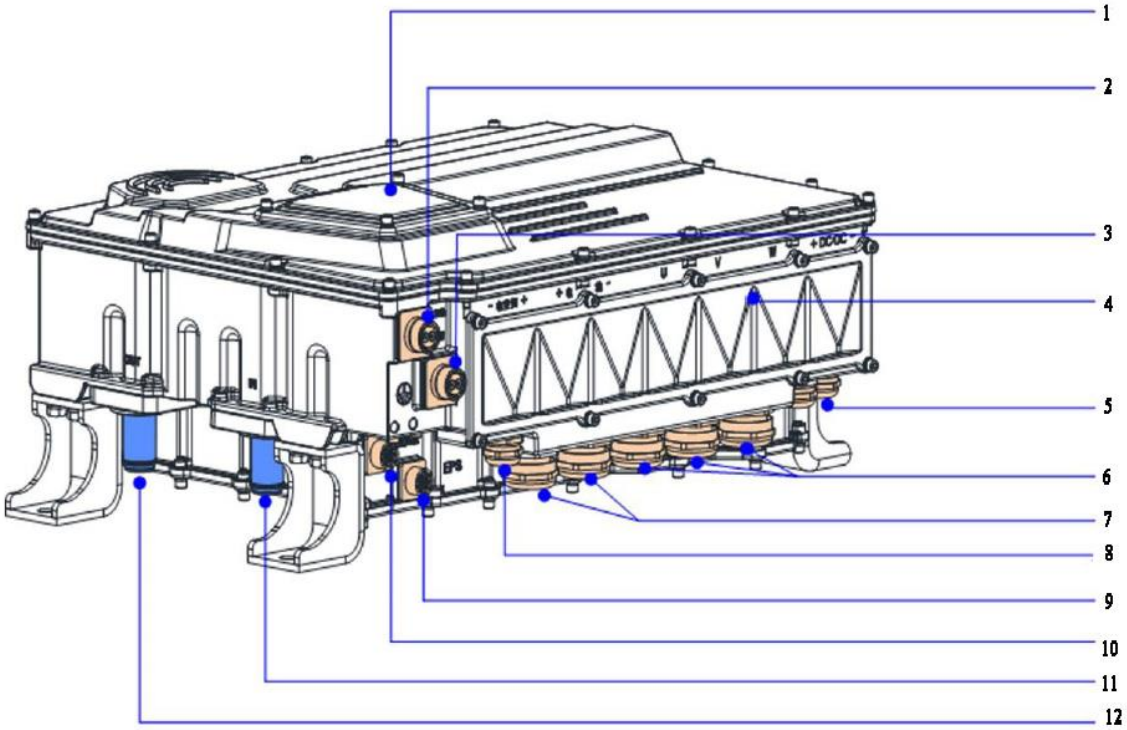

No.	Part No.	Part name	Qty.	Wearing Prt.	Remark
1		Fusebox cover plate			
2		Slow charging input			
3		Electric defrosting output			
4		Terminal cover plate			
5		24V output port/DCDC OUTPUT			
6		Drive motor output port (U.V.W)			
7		Battery output port			
8		Fast charging input (2 holes, not used)			
9		EHPS output			
10		Air compressor output			
11		Water inlet			
12		Water outlet			

Controller

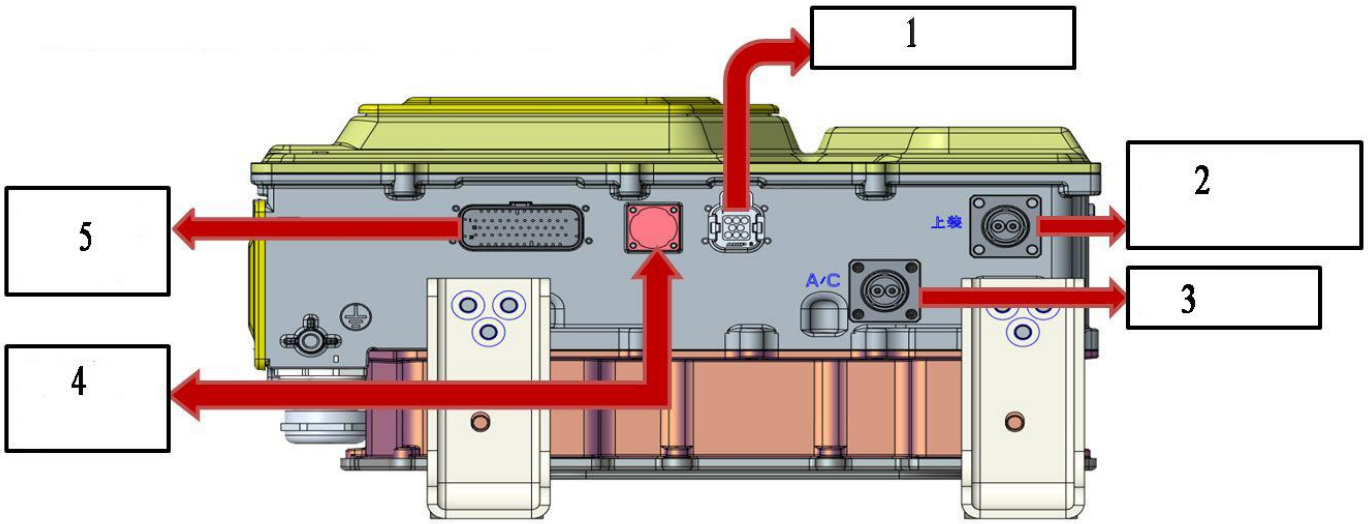

No.	Part No.	Part name	Qty.	Wearing Prt.	Remark
1		8 pin resolver plug-in			
2		Loading plug-in (not used)			
3		Air conditioning plug-in			
4		9 pin commissioning plug-in			
5		35 pin wiring harness plug-in			

Battery system

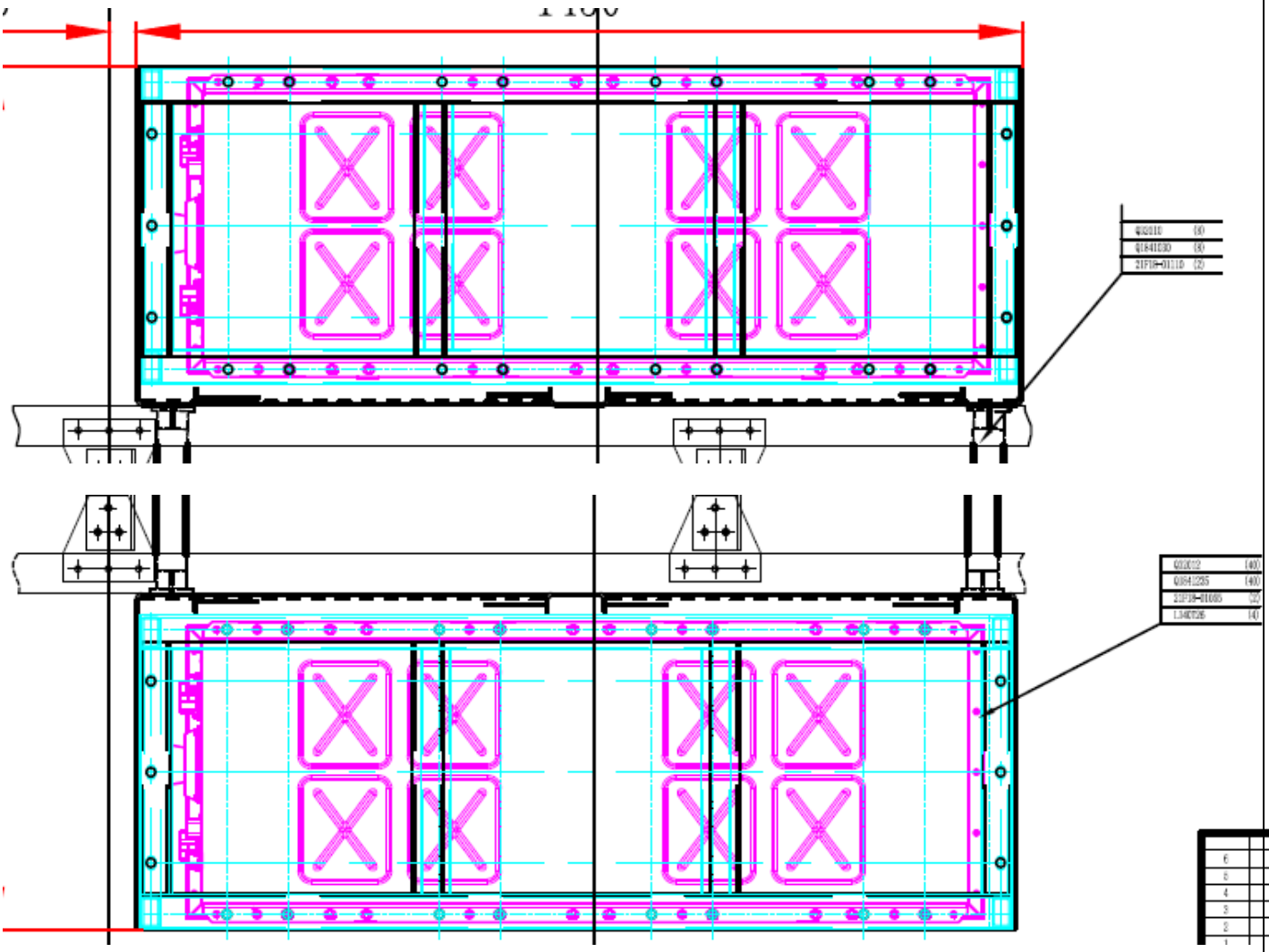

No.	Part No.	Part name	Qty.	Wearing Prt.	Remark
1	L140T26	Battery pack	4		
2	21F18-01055	Pack frame	2		
3	21F18-01110	Middle support, pack frame	2		
4	Q32012	Hexagon flange nut	40		
5	Q1841235	Hexagon flange bolt	40		
6	Q32010	Hexagon flange nut	8		
7	Q1841030	Hexagon flange bolt	8		

Battery Pack

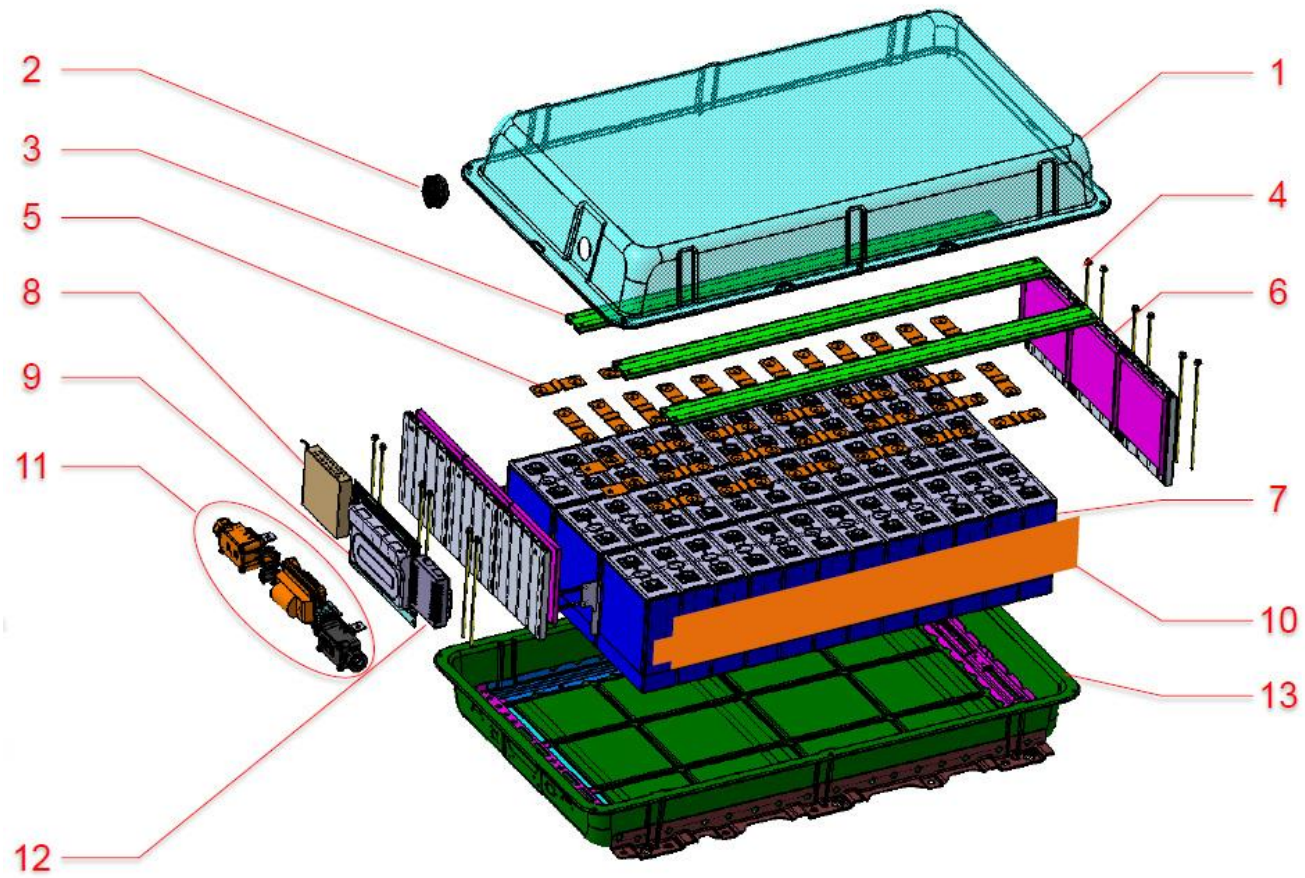

No.	Part No.	Part name	Qty.	Wearing Prt.	Remark
1		Housing cover			
2		Air pressure balance valve			
3		Cell isolated batten			
4		Bolt			
5		Aluminum bar			
6		End plate			
7		Battery cell			
8		Fire extinguisher controller			
9		Integrated CSC			
10		Heating film			
11		High and low voltage connector			
12		Controller			
13		Housing tray			

Transmission system

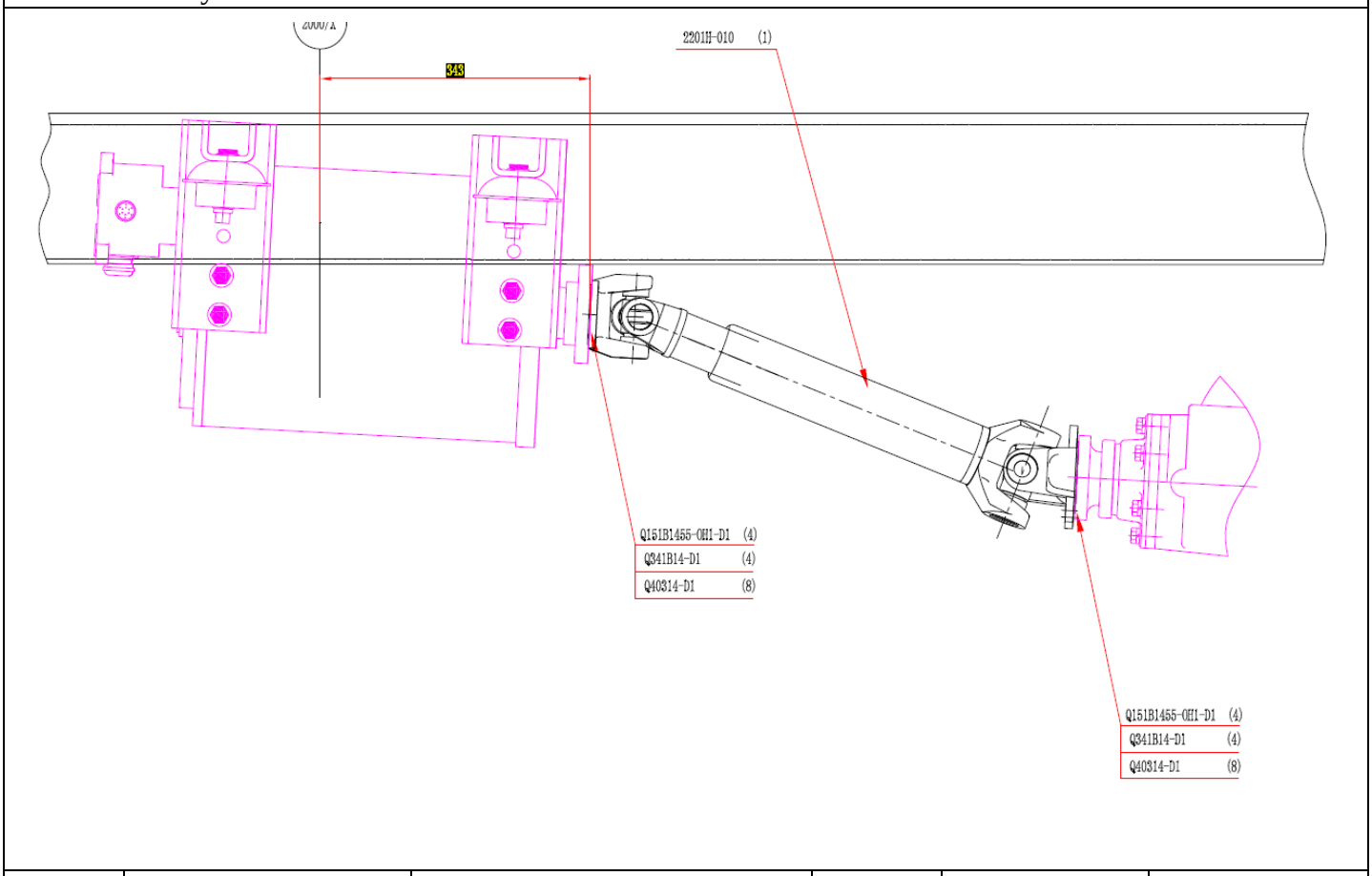

No.	Part No.	Part name	Qty.	Wearing Prt.	Remark
1	2201H-010	Transmission shaft assy.	1		
2	Q151B1455-0H1-D1	Bolt	8		
3	Q40314-D1	Spring washer	16		
4	Q341B14-D1	Nut	8		

Frame system

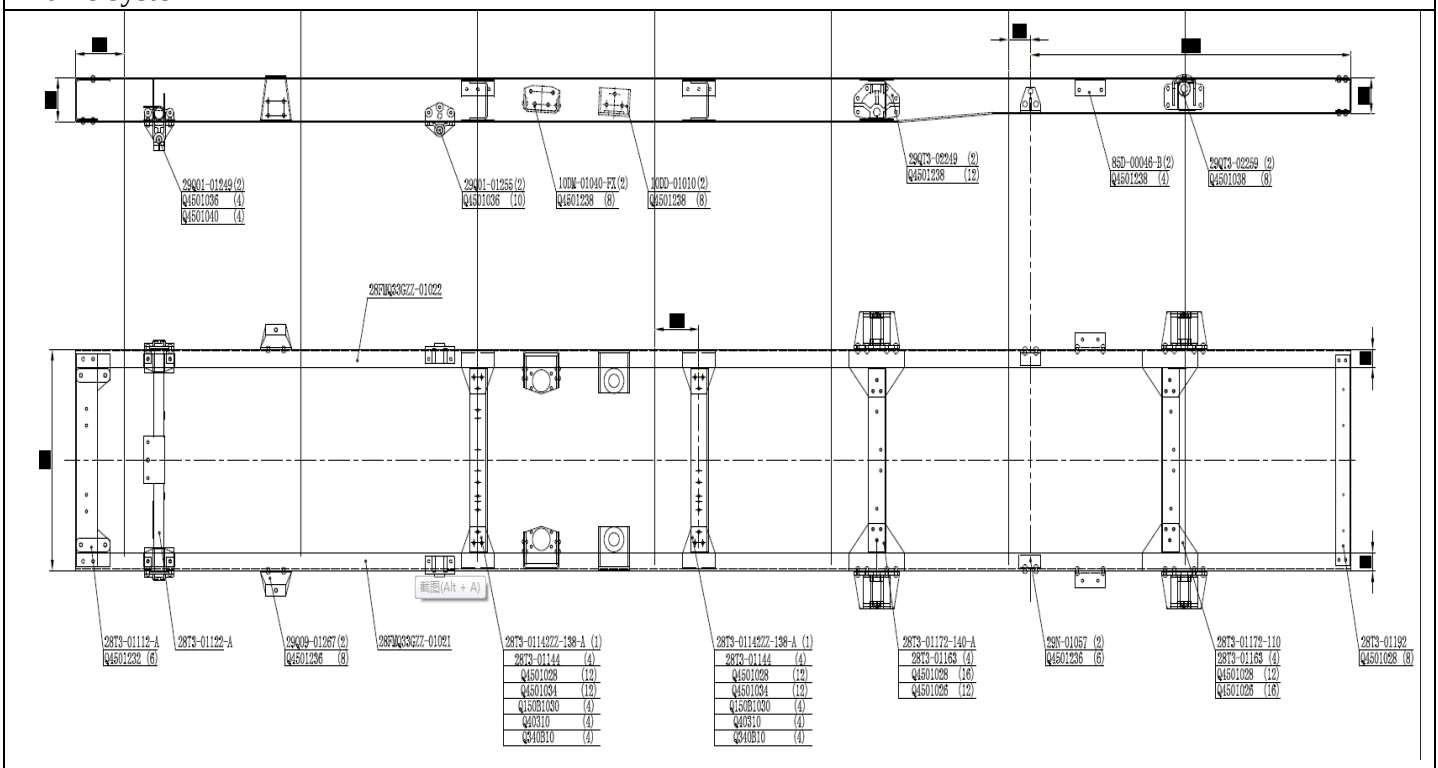

No.	Part No.	Part name	Qty.	Wearing Prt.	Remark
1	28FMQ33GYZZ-01021	L. longitudinal beam	1		
2	28FMQ33GZZ-01022	R. longitudinal beam	1		
3	28T3-01112-A	First horizontal beam	1		
4	Q4501232	Semi-tubular rivet	6		
5	28T3-01122-A	Second horizontal beam	1		
6	29Q01-01249	Front bracket, front leafspring	2		
7	Q4501036	Semi-tubular rivet	4		
8	Q4501040	Semi-tubular rivet	4		
9	29Q01-01255	Rear bracket, front leafspring	2		
10	Q4501036	Semi-tubular rivet	10		
11	29Q09-01267	Upper bracket, shock absorber	2		
12	Q4501236	Semi-tubular rivet	8		
13	28T3-01142ZZ-138-A	Third/fourth horizontal beam	2		
14	28T3-01144	Connection plate, horizontal	4		

		beam			
15	Q4501034	Semi-tubular rivet	24		
16	Q4501028	Semi-tubular rivet	24		
17	Q150B1030	Hexagon bolt	8		
18	Q340B10	Hexagon nut	8		
19	Q40310	Spring washer	8		
20	28T3-01172-140-A	Horizontal beam, front suspension	1		
21	28T3-01163	Connection plate, horizontal beam, suspension	4		
22	Q4501028	Semi-tubular rivet	16		
23	Q4501026	Semi-tubular rivet	12		
24	28T3-01172-110	Horizontal beam, rear suspension	1		
25	28T3-01163	Connection plate, horizontal beam, suspension	4		
26	Q4501028	Semi-tubular rivet	16		
27	Q4501026	Semi-tubular rivet	12		
28	28T3-01192-118	Rear horizontal beam	1		
29	Q4501028	Semi-tubular rivet	8		
30	29QT-02249	Front bracket, rear leaf spring	2		
31	Q4501028	Semi-tubular rivet	12		
32	29QT3-02259	Rear bracket, rear leaf spring	2		
33	Q4501038	Semi-tubular rivet	8		
34	29N-01057	Bracket, damping block	2		
35	Q4501236	Semi-tubular rivet	6		
36	10DM-01040-FX	Bracket, motor front suspension	2		
37	Q4501238	Semi-tubular rivet	8		
38	10DD-01010	Bracket, motor rear suspension	2		
39	Q4501238	Semi-tubular rivet	8		
40	85D-00046-A	Angle steel, cargo box	4		
41	Q4501238	Semi-tubular rivet	8		

Cabin assy.

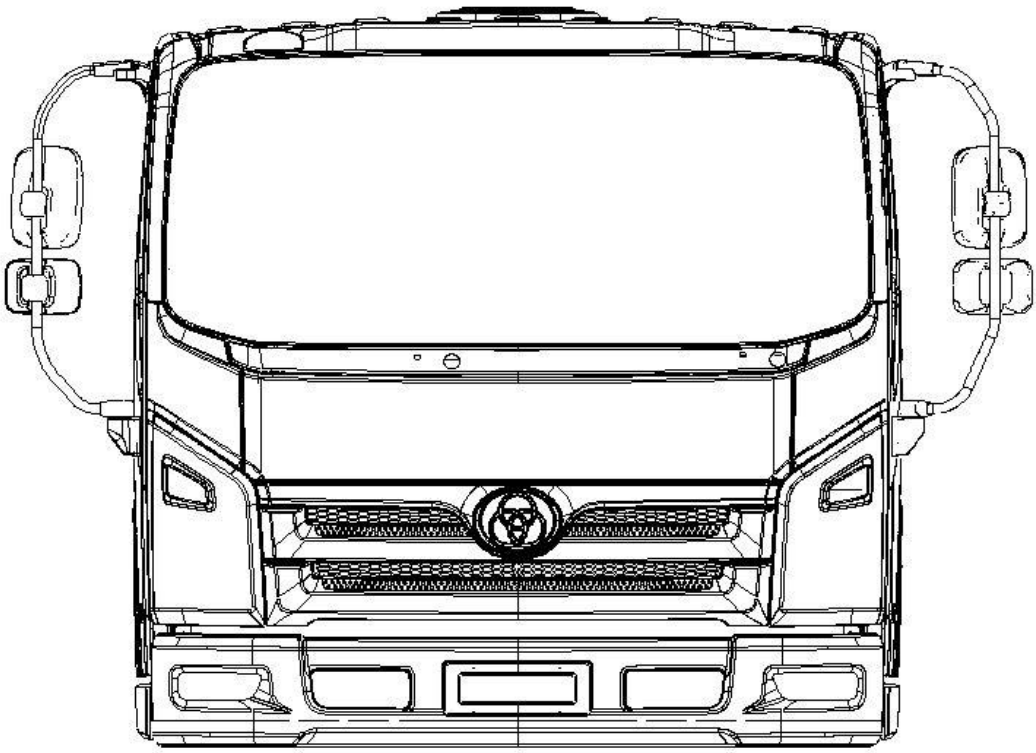

No.	Part No.	Part name	Qty.	Wearing Prt.	Remark
	TRDPT3AD-M2BE-BTD	Cabin assy.	1		

Acceleration pedal assy.

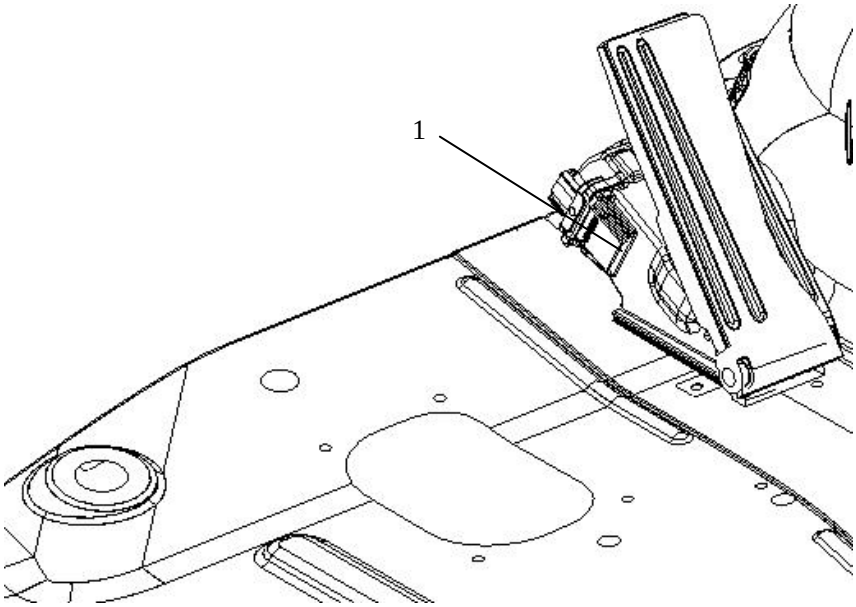

No.	Part No.	Part name	Qty.	Wearing Prt.	Remark
1	L9140010010	Acceleration pedal	1		
	Q2140820	Cross recessed pan head screw	2		

Clutch brake system pipeline

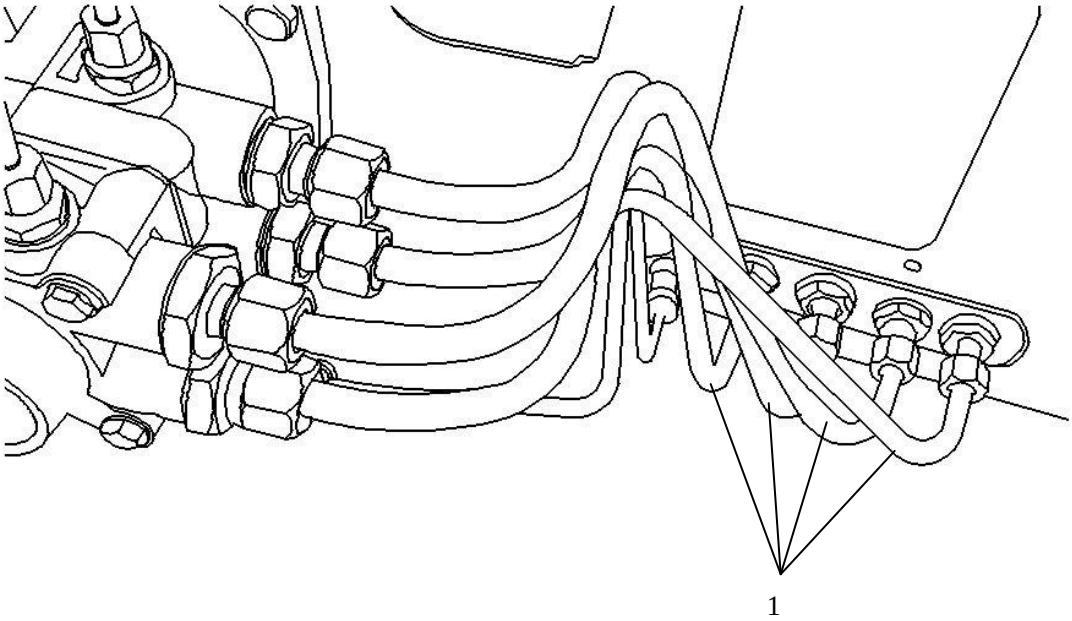

No.	Part No.	Part name	Qty.	Wearing Prt.	Remark
1	L9351020070	Brake valve inlet & outlet pipe φ10	1		
	L9351020090	Brake valve inlet & outlet pipe φ10	1		
	L9351020110	Brake valve inlet & outlet pipe φ10	1		
	L9351020130	Brake valve inlet & outlet pipe φ10	1		

Transmission control support

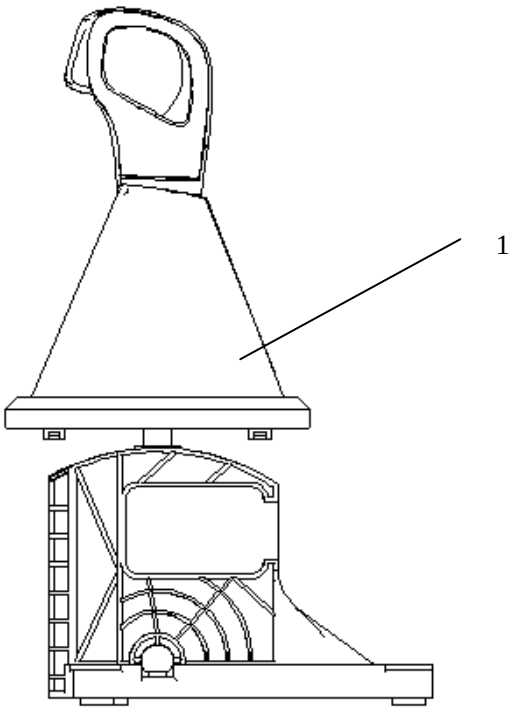

No.	Part No.	Part name	Qty.	Wearing Prt.	Remark
1	1703010-T728	Transmission operation mechanism assy.	1		
	Q11840620	Hexagon flange bolt	3		
	Q40106	Plain washer	3		
	Q40306	Spring washer	3		
	Q32006	Hexagon flange nut	3		

Steering transmission mechanism

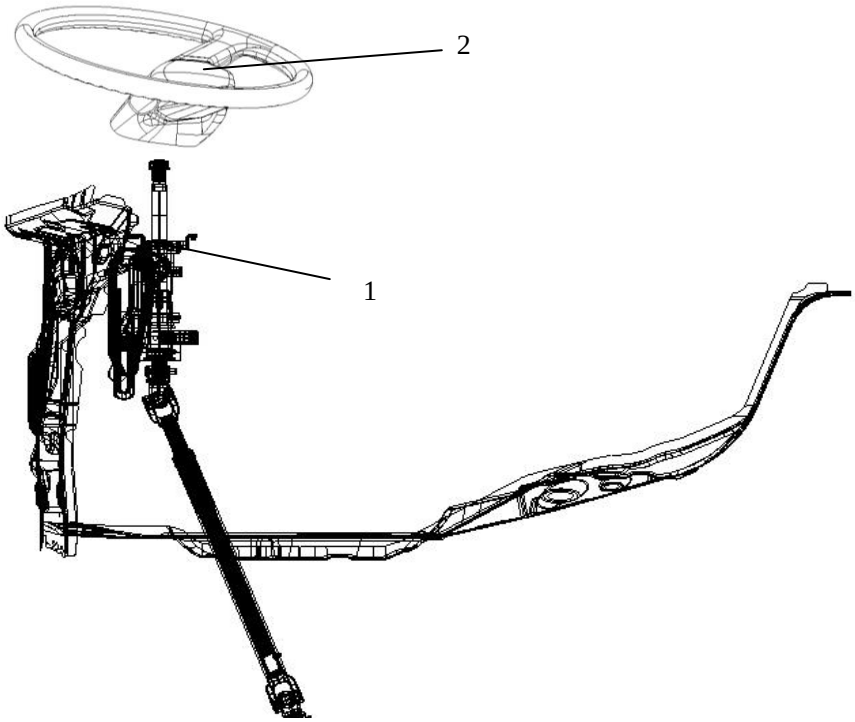

No.	Part No.	Part name	Qty.	Wearing Prt.	Remark
1	L9340040010	Steering transmission mechanism assy.	1		
	Q1760824	Cross recessed guiding hexagon bolt	4		
	Q40208	Plain washer	4		
	Q40308	Spring washer	4		
	Q32008	Hexagon flange nut	4		
2	34FT3-02010D-S2	Steering wheel assy.	1		

Brake pedal assy.

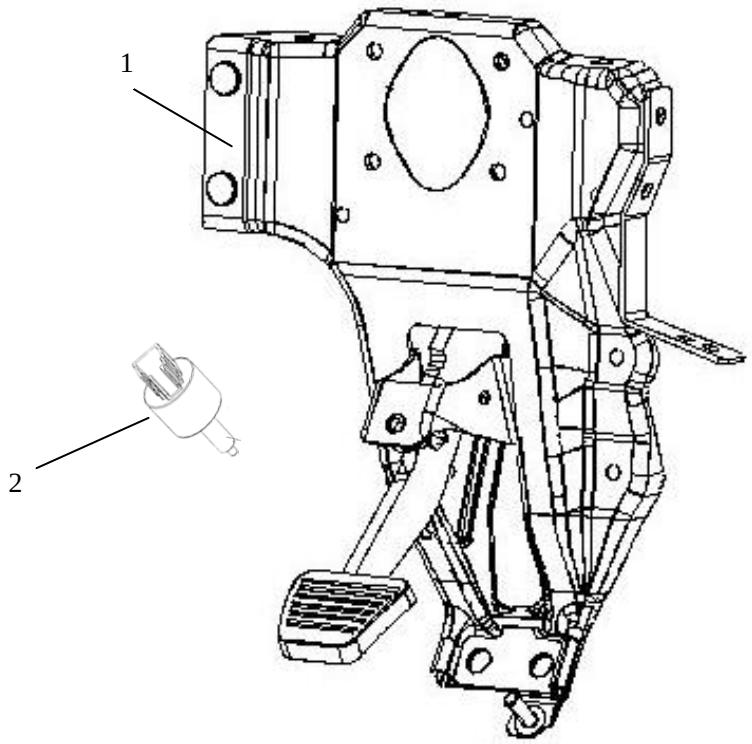

No.	Part No.	Part name	Qty.	Wearing Prt.	Remark
1	L9351010010	Brake pedal bracket assy.	1		
2	41T1-34010	Brake lamp switch assy	1		

Air brake valve assy.

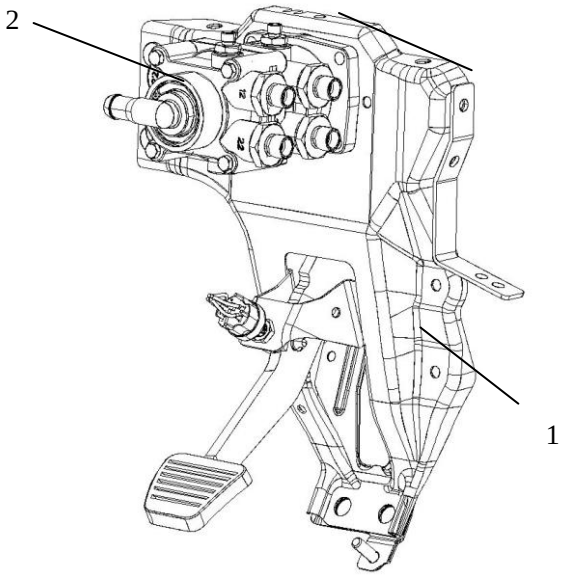

No.	Part No.	Part name	Qty.	Wearing Prt.	Remark
1	L9351010010	Brake pedal bracket assy.	1		
	Q1500825	Hexagon bolt	4		
2	L9351020010	Brake valve assy.	1		

Hand brake valve assy.

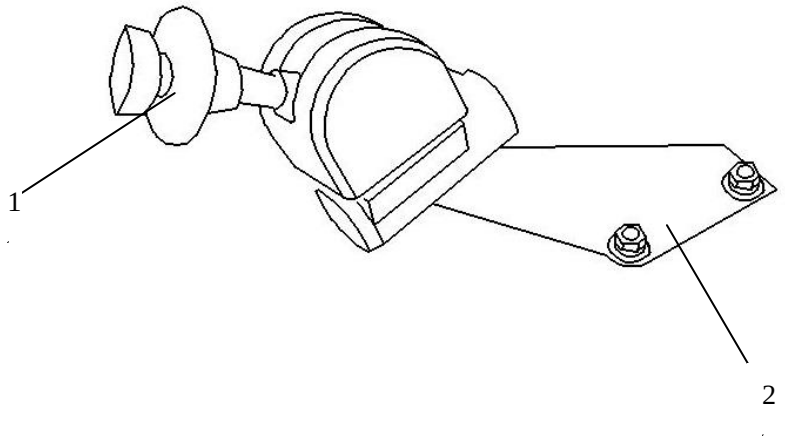

No.	Part No.	Part name	Qty.	Wearing Prt.	Remark
1	L9351040010	Hand brake valve assy.	1		
	L9351060001	Hand brake valve bracket	1		
	Q40108	Plain washer	2		
	Q40308	Spring washer	2		
	Q32008	Flange nut	2		

Ignition lock assy.

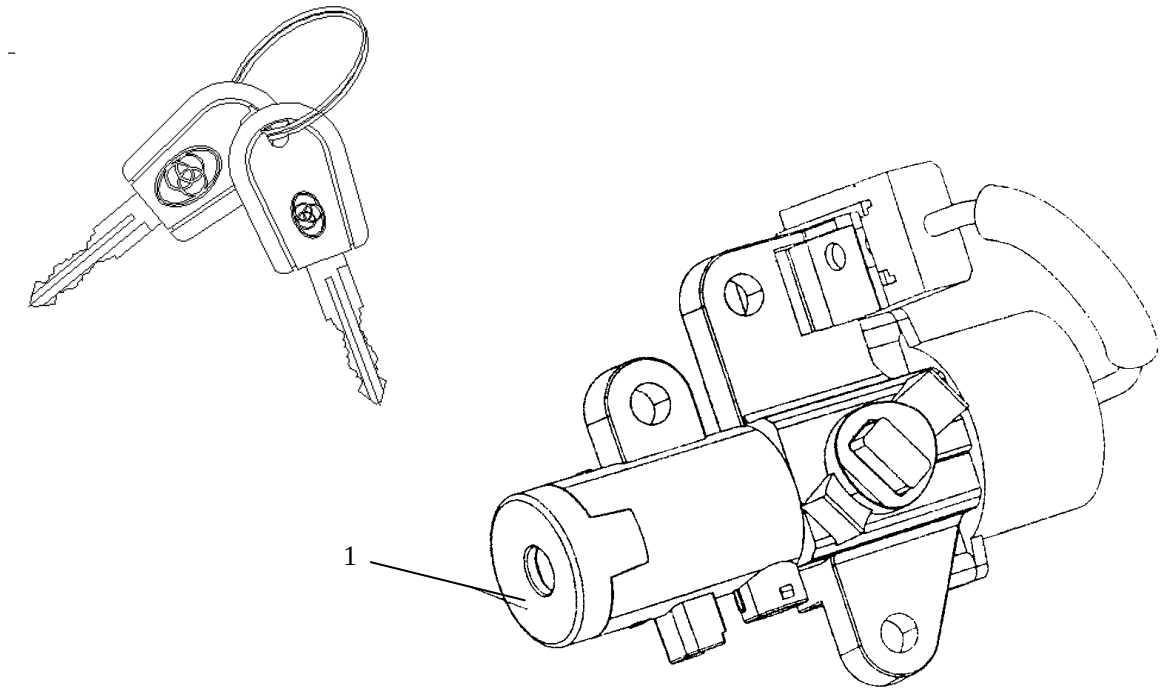

No.	Part No.	Part name	Qty.	Wearing Prt.	Remark
1	L9373030010	Ignition lock assy. and key	1		
	Q1840820	Hexagon flange bolt	2		

Spraying kettle assy.

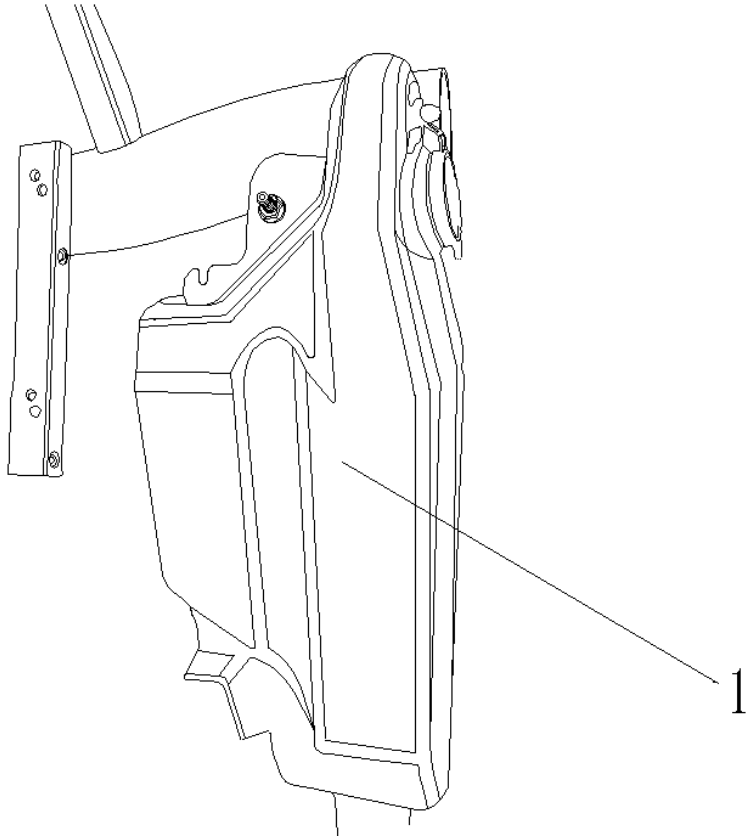

No.	Part No.	Part name	Qty.	Wearing Prt.	Remark
1	L9822020010	Window glass washer assy.	1		
	Q1840620	Hexagon flange bolt	1		
	Q32008	Hexagon flange nut	1		

Footrest pedal assy.

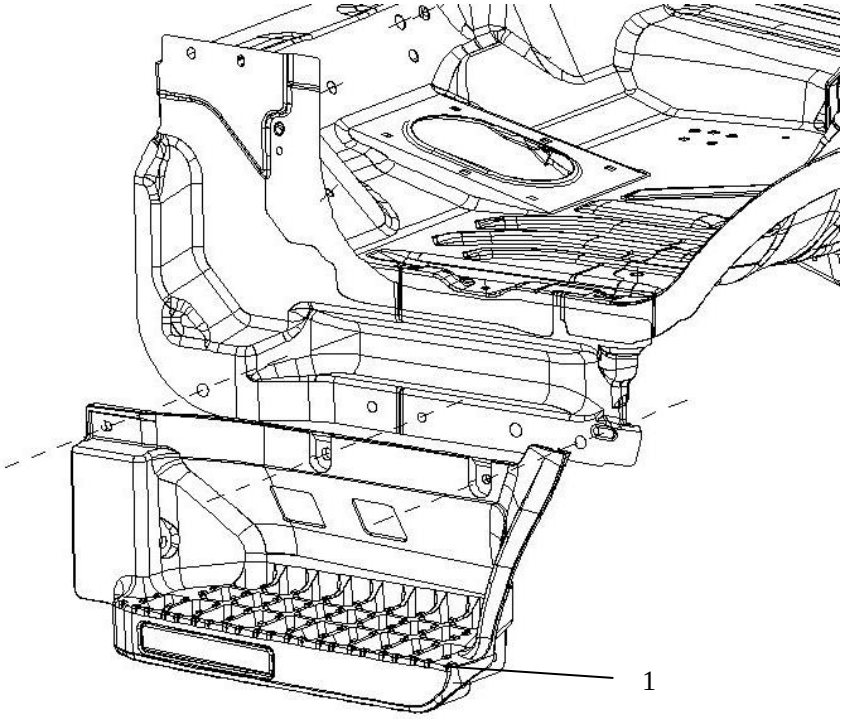

No.	Part No.	Part name	Qty.	Wearing Prt.	Remark
1	L9825990001	L. footrest pedal assy.	1		
	L9825990002	R. footrest pedal assy.	1		
	Q150B0835	Hexagon flange bolt	10		

Front brand label assy.

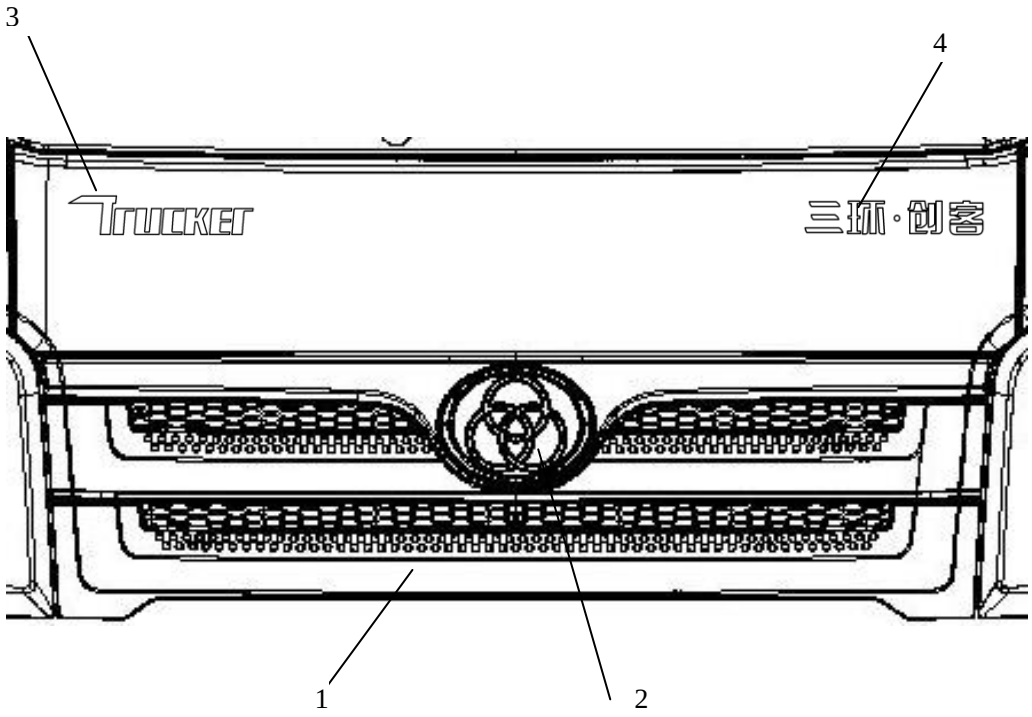

No.	Part No.	Part name	Qty.	Wearing Prt.	Remark
1	L9501020019	Engine radiator cover	1		
2	50F29-T3010-SH	Cabin logo	1		
3	50FT3-05020	English label	1		
4	50FT3-05010	Chinese label	1		

Plugging piece

,

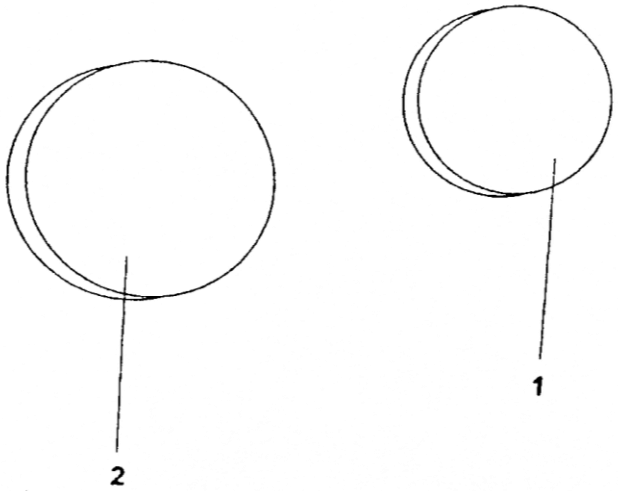

No.	Part No.	Part name	Qty.	Wearing Prt.	Remark
1		Plugging piece 1	40		
2		Plugging piece 2	10		

Cabin tilting system

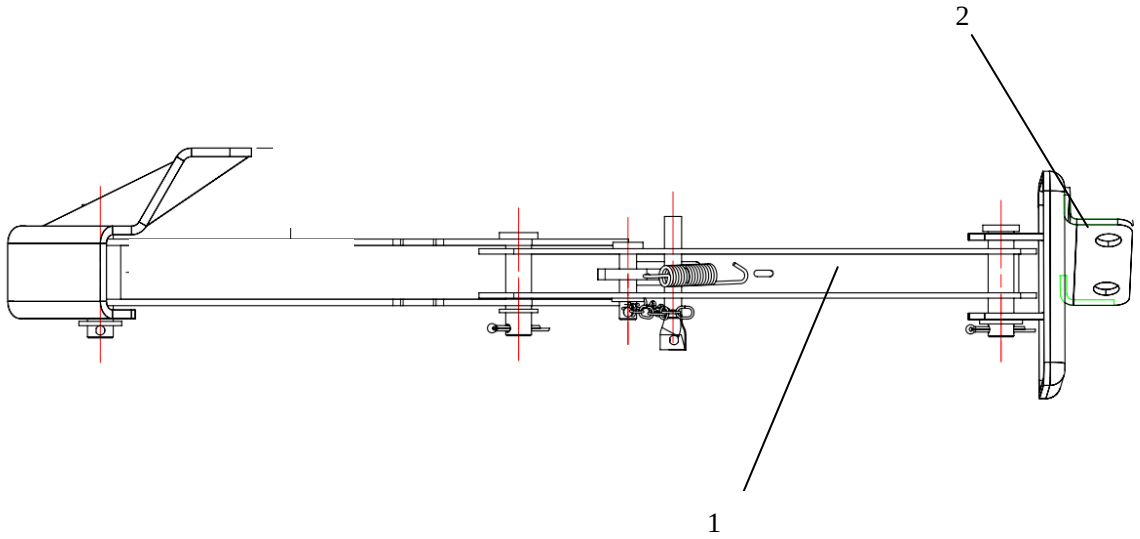

No.	Part No.	Part name	Qty.	Wearing Prt.	Remark
1	L9502990060	Cabin stopper assy.	1		
2		Cabin stopper bracket	1		
		Pin	1		

Cabin rear locking mechanism

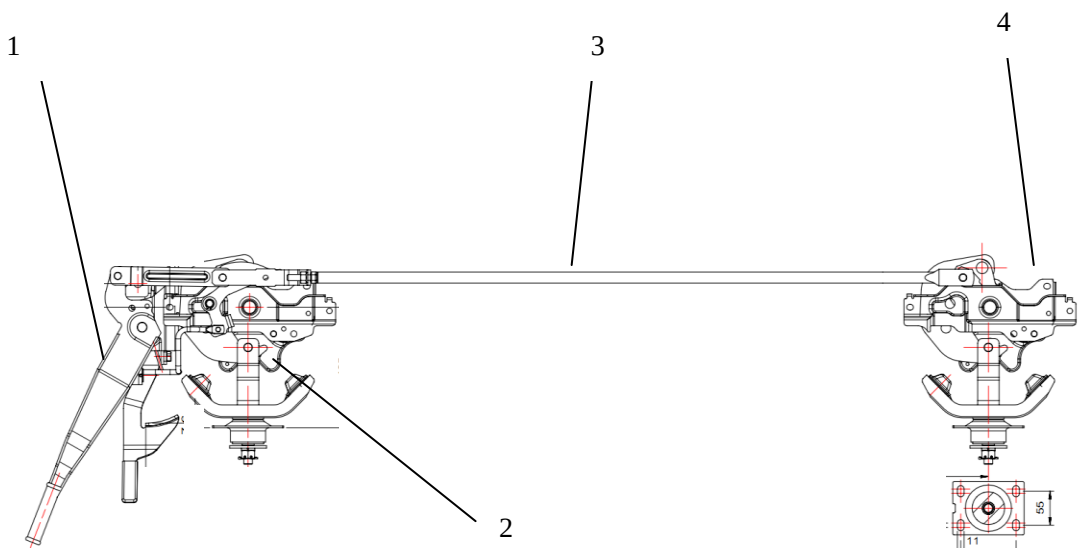

No.	Part No.	Part name	Qty.	Wearing Prt.	Remark
1	L9516020030	Operation handle assy.	1		
2	L9516020050	L. locking hook assy.	1		
3	L9516020090	Connection lever of locking hook	1		
4	L9516020070	R. locking hook assy.	1		
	Q40108	Plain washer	11		
	Q40308	Spring washer	11		
	Q32008	Hexagon flange nut	4		
	Q1500820	Hexagon bolt	7		

Floor decorative pieces

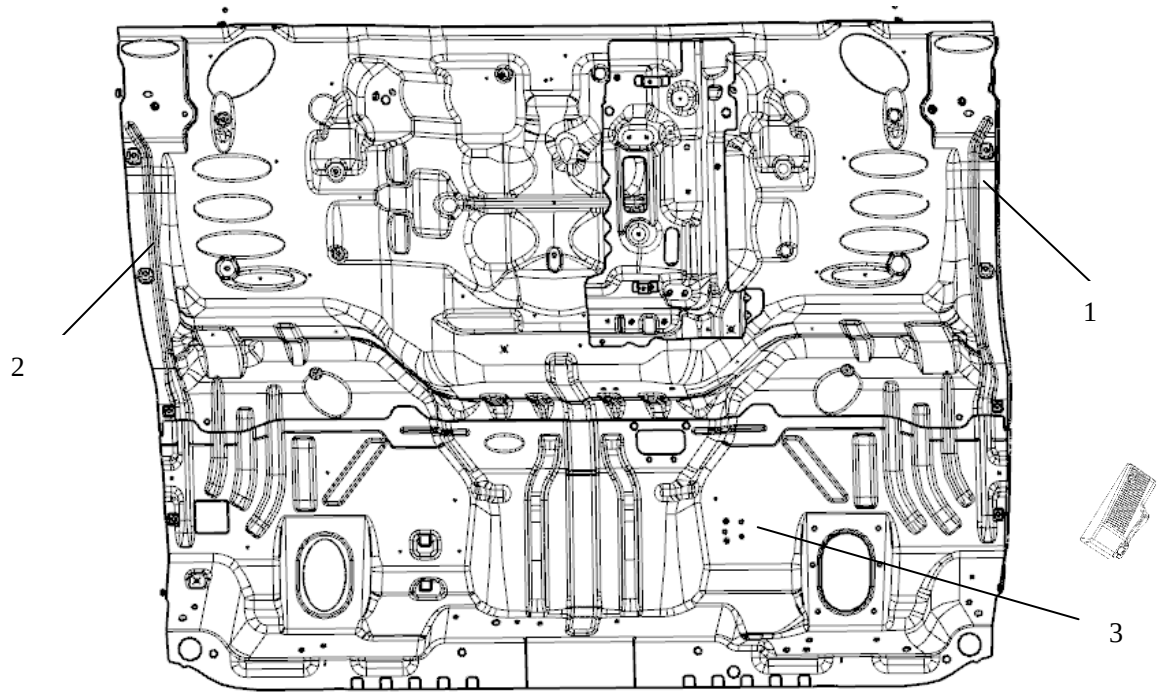

No.	Part No.	Part name	Qty.	Wearing Prt.	Remark
1	L9814010001	L. scuff plate	1		
2	L9814010002	R. scuff plate	1		
	Q2726216	Cross recessed pan head screw（Dacromet）	8		
3	L9140010010	Electronic acceleration pedal assy.	1		

Glove box assy. Driver side

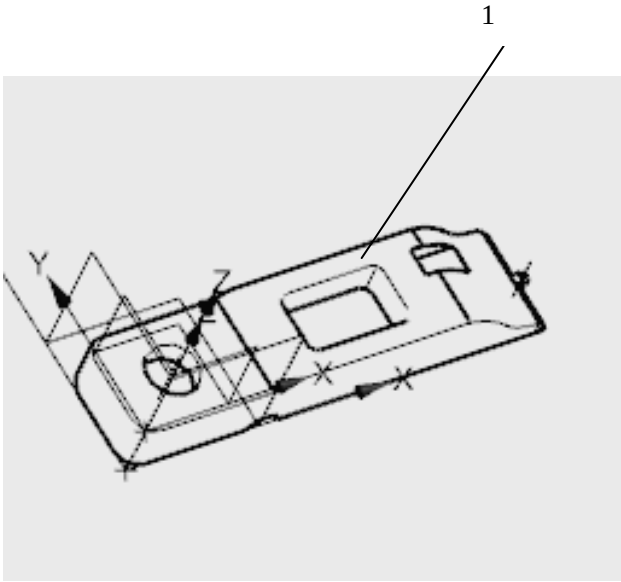

No.	Part No.	Part name	Qty.	Wearing Prt.	Remark
1	L9814040001	Hand brake valve cover	1		

Little seat

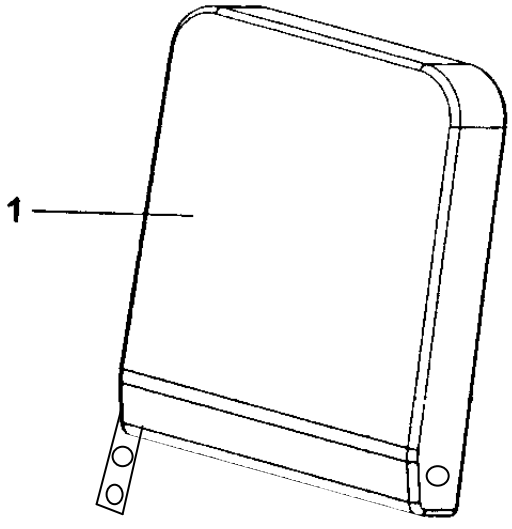

No.	Part No.	Part name	Qty.	Wearing Prt.	Remark
1	L9505020110	Passenger backrest assy.	1		
	Q1500820	Hexagon bolt	3		
	Q40108	Plain washer	3		
	Q40308	Spring washer	3		

Steering column assy.

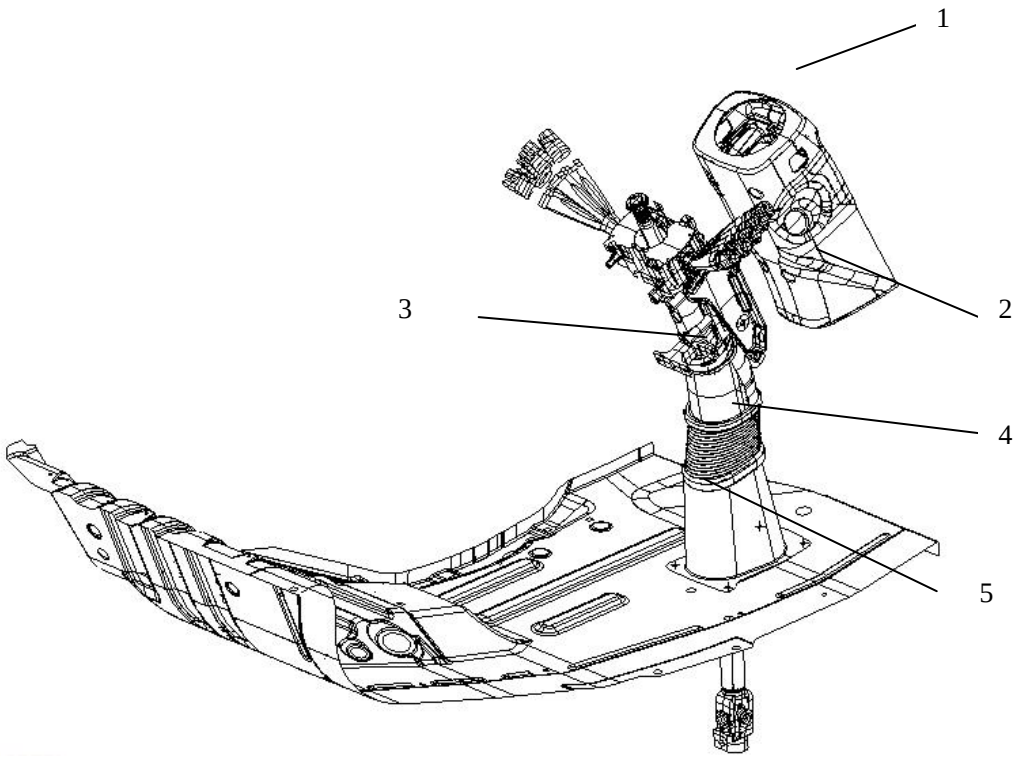

No.	Part No.	Part name	Qty.	Wearing Prt.	Remark
1	L9340330001	Steering column rear bushing	1		
2	L9340330003	Steering column front bushing assy.	1		
3	L9340040010	Steering transmission mechanism with adjuster	1		
4	L9340330005	Middle bushing	1		
5	L9340330007	Lower bushing, steering column	1		

Cabin carpet assy.

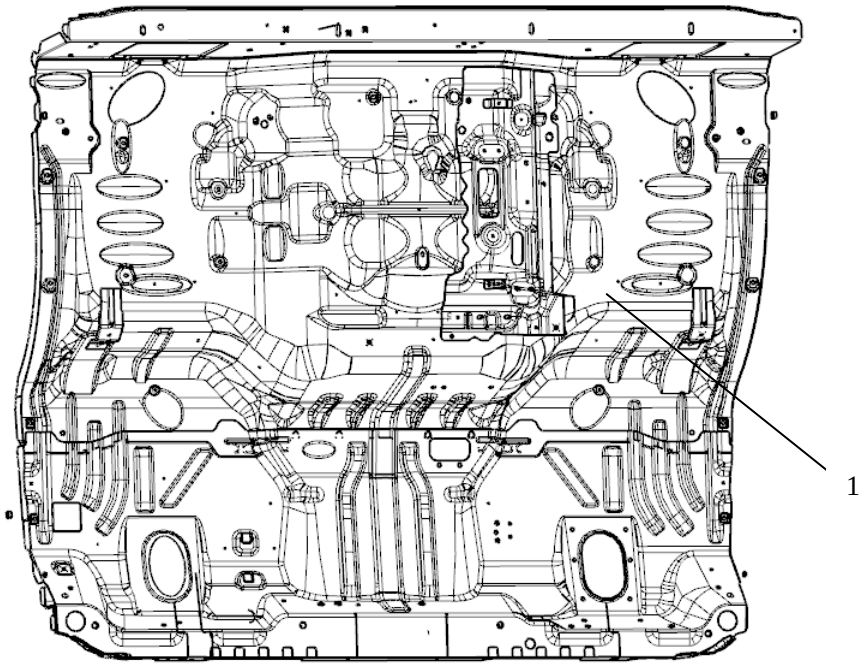

No.	Part No.	Part name	Qty.	Wearing Prt.	Remark
1	L9814020010	Carpet assy.	1		

Heat insulation pad assy.

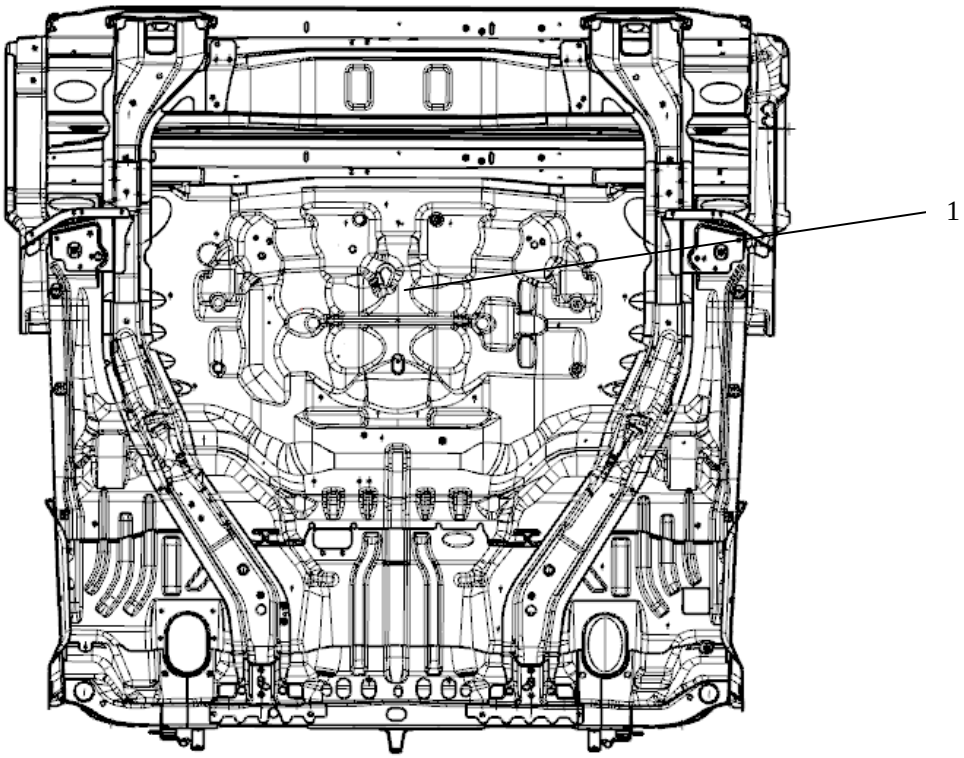

No.	Part No.	Part name	Qty.	Wearing Prt.	Remark
1	L9827010001	Heat insulation pad	1		
	Q32006	Hexagon flange nut（Dacromet）	10		
	Q40206	Plain washer	10		

Floor anti vibration pad assy.

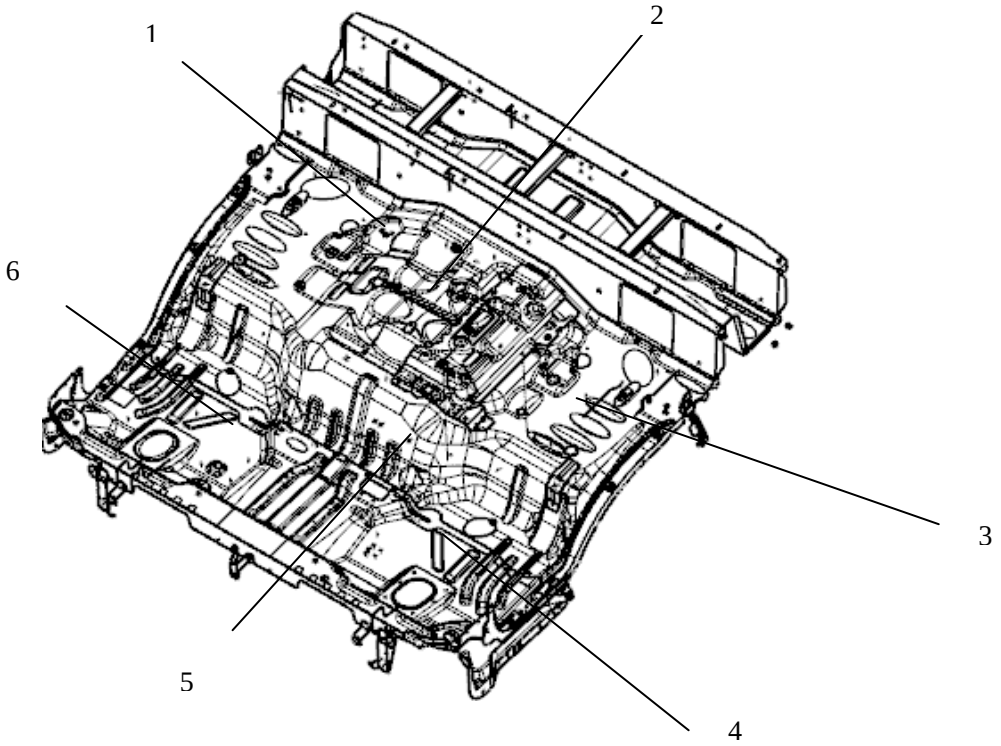

No.	Part No.	Part name	Qty.	Wearing Prt.	Remark
1		Rr. R. antivibration pad- floor	1		
2		Rr. Antivibration pad-pack	1		
3		Rr. L. antivibration pad-floor	1		
4		Fr. Antivibration pad- L. floor	1		
5		Fr. Antivibration pad- M. floor/pack	1		
6		Fr. Antivibration pad- R. floor	1		

Wiper assy.

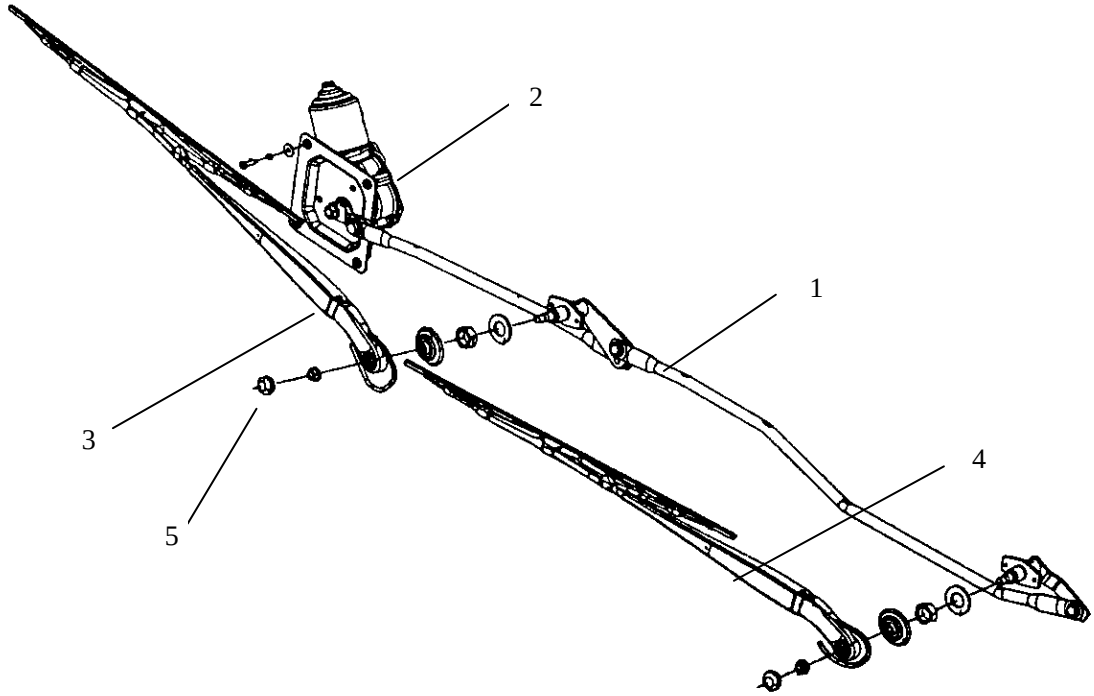

No.	Part No.	Part name	Qty.	Wearing Prt.	Remark
1	L9822010030	Wiper rod assy.	1		
2	L9822010040	Wiper assy.	1	Wearing Prt.	
3	L9822010010	L. wiper arm	1	Wearing Prt.	
4	L9822010020	R. wiper arm	1	Wearing Prt.	
5	Q32008	Hexagon flange bolt	2		

Front windshield and seals assy.

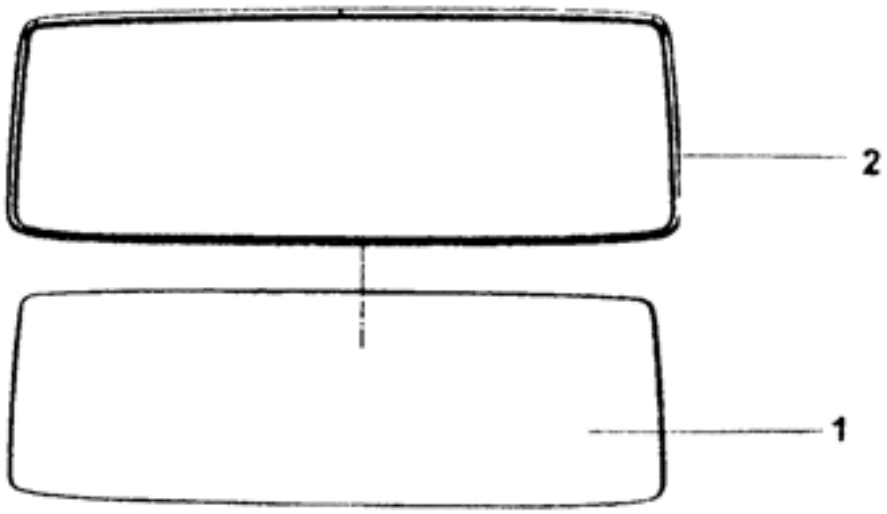

No.	Part No.	Part name	Qty.	Wearing Prt.	Remark
1	L9510010001	Front windshield	1		
2	L9510020001	Seal	1		

Face shield assy.

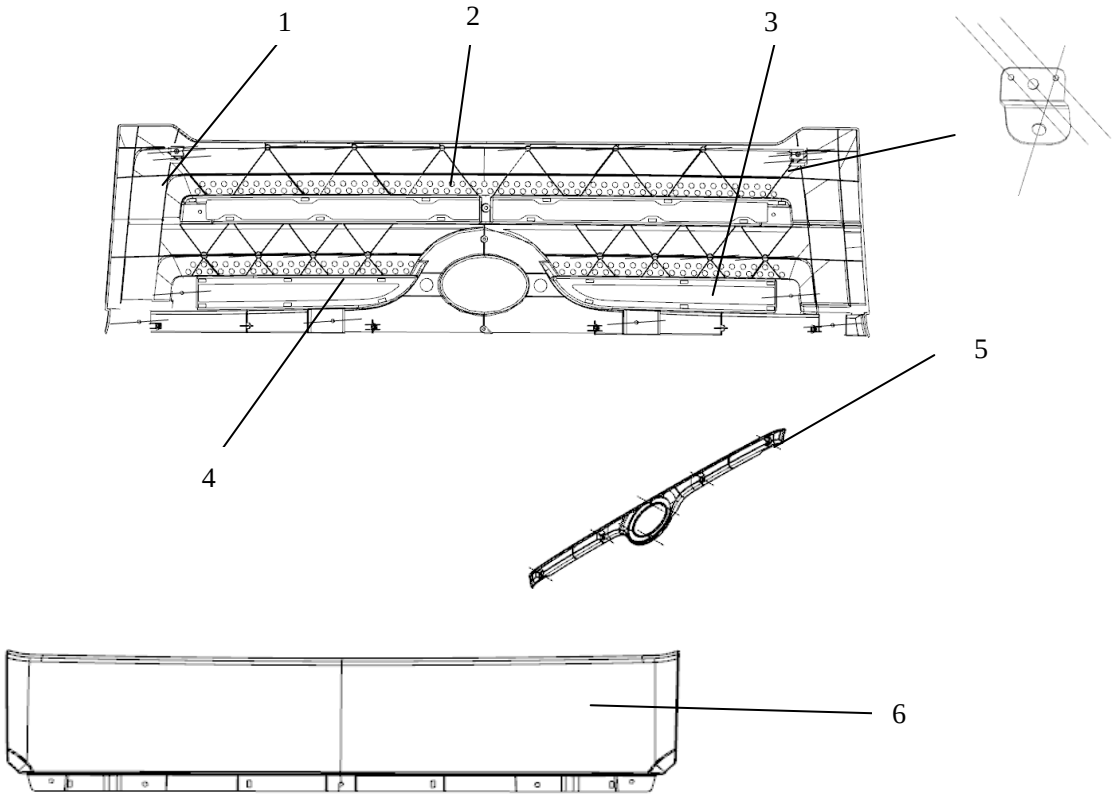

No.	Part No.	Part name	Qty.	Wearing Prt.	Remark
1	L9501020019	Radiator face shield	1		
2	L9501020039	Lower grill, radiator	1		
3	L9501020037	L. upper grill, radiator	1		
4	L9501020038	R. upper grill, radiator	1		
5	L9501020041	Decorative plate, radiator face shield (galvanized)	1		
		Face shield bracket	2		
		Clip	4		
	Q2140612	Cross recessed pan head screw	3		
6		Upper panel, face shield	1		
		Clip	2		
	Q2140620	Cross recessed pan head screw	3		
		Plain washer	3		

Side panel assy. Face shield

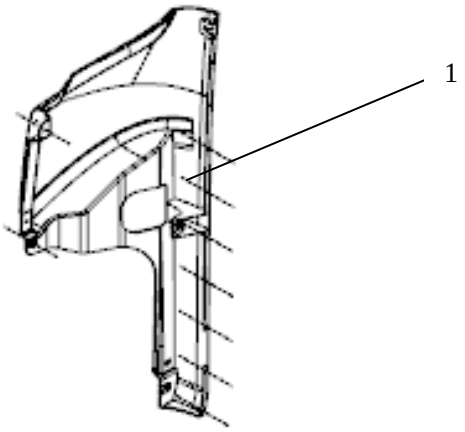

No.	Part No.	Part name	Qty.	Wearing Prt.	Remark
1	L9501020031	L. side panel	1		
	L9501020032	R. side panel	1		
	L9501020033	Upper clip-side panel	2		
	Q2140618	Cross recessed pan head screw	8		
	Q40206	Plain washer	8		

Instrument panel skeleton assy.

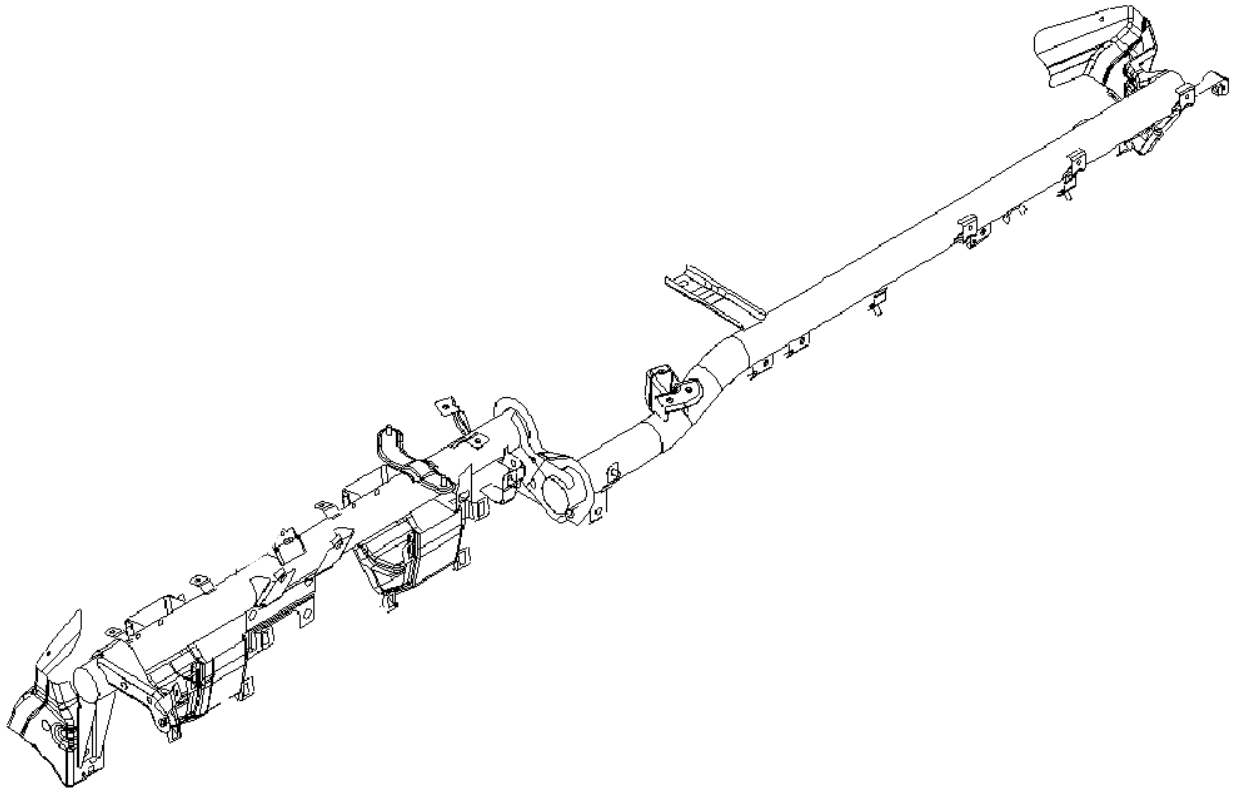

No.	Part No.	Part name	Qty.	Wearing Prt.	Remark
1	L9503020010	Instrument panel skeleton assy.	1		

Instrument panel assy.

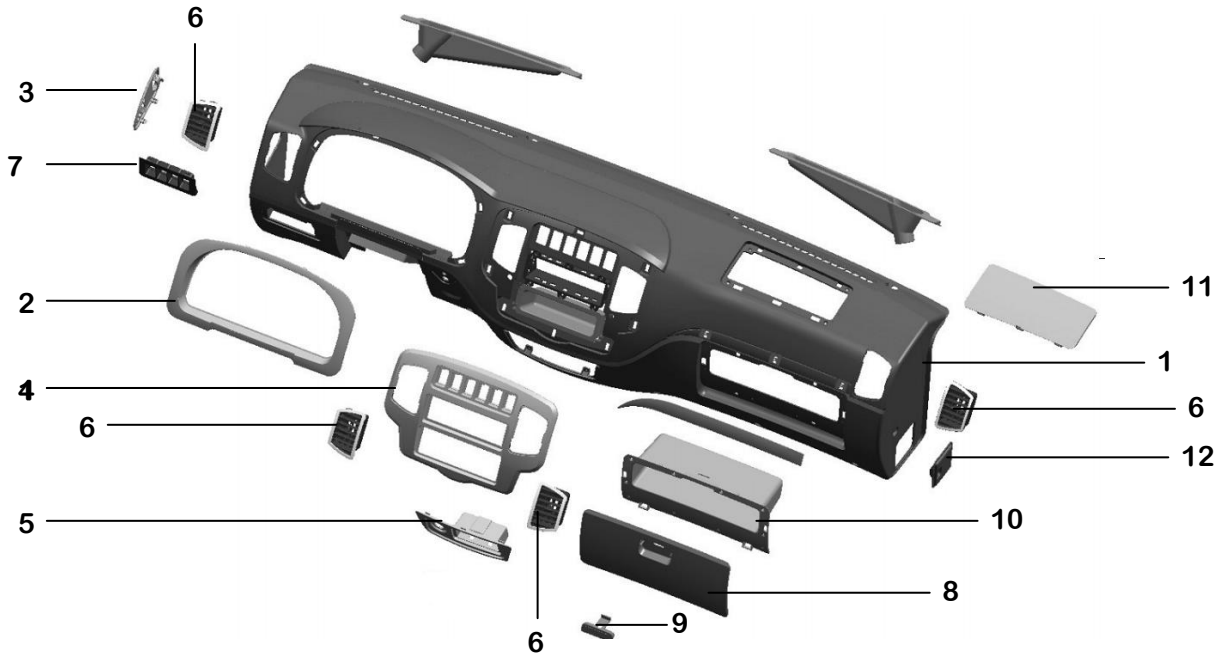

No.	Part No.	Part name	Qty.	Wearing Prt.	Remark
1	L9503010001	Main body	1		
	L9503010007	Air vent. panel	4		
	L9503010008	Cup seat	2		
	L9503010009	L. cover plate	1		
	L9503010011	R. cover plate	1		
	L9503010019	Screw cover plate, face shield	4		
	L9503010018	Radio frame	1		
	L9503010020	Air duct, face shield	1		
	L9503010021	Air duct, face blowing	1		
2	L9503010002	Instrument cover	1		
3	L9503010003	Oil reservoir cover	1		
4	L9503010004	Central facia	1		
	L9503010012	GPS cover	1		
5	L9503010005	Glove box, central facia	1		
6	L9503010006	Air vent.	4		
7	L9503010010	L. three-hole switch seat	1		
8	L9503010013	Toolbox cover	1		
9	L9503010014	Toolbox handle	2		
10	L9503010015	Toolbox	1		
11	L9503010016	Fuse box cover	1		

12	L9503010017	Water reservoir cover	1		

Back panel decorative plate assy.

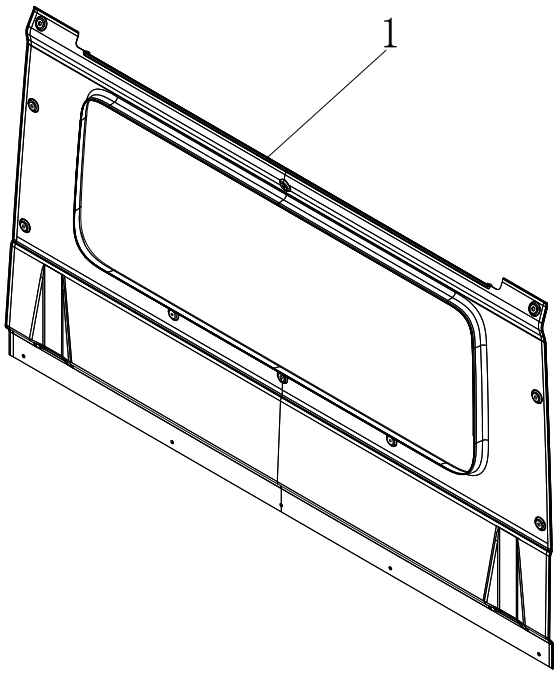

No.	Part No.	Part name	Qty.	Wearing Prt.	Remark
1	L9817010001	Inner decorative plate assy. Back panel	1		
	L9502990005	Snap button（big）	4		

Rear window assy.

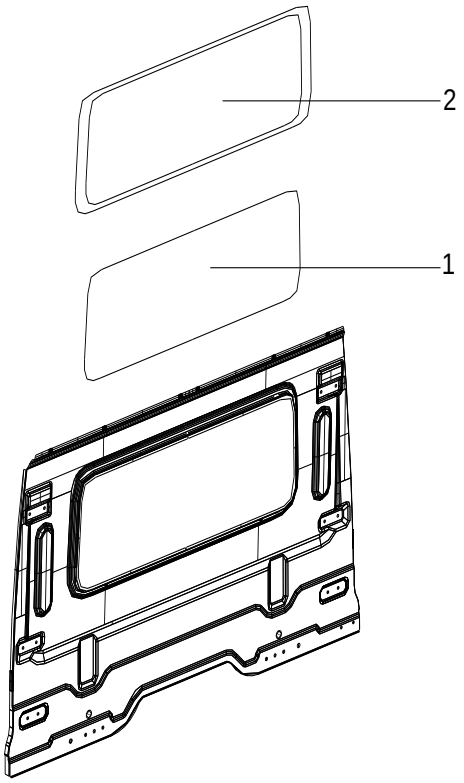

No.	Part No.	Part name	Qty.	Wearing Prt.	Remark
1	L9511010001	Rear windshield	1	Wearing Prt.	
2	L9511020001	Seal, rear windshield	1	Wearing Prt.	

Side body decoration assy.

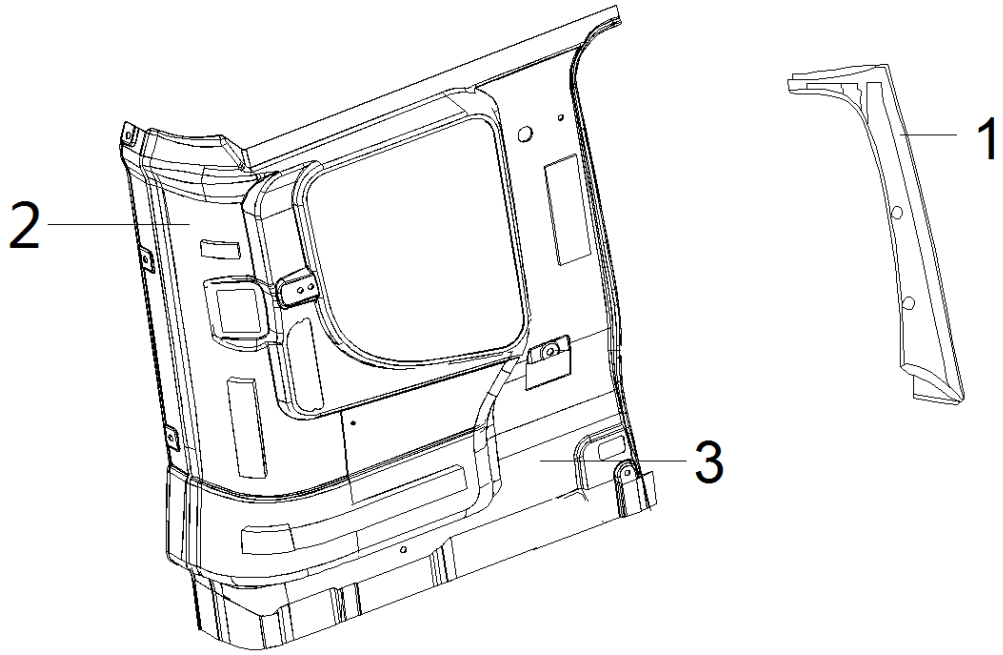

No.	Part No.	Part name	Qty.	Wearing Prt.	Remark
1	L9815020001	L.A-pillar cover	1		
	L9815020002	R. A-pillar cover	1		
2	L9815010001	L. B-pillar upper cover assy.	1		
	L9815010002	R. B-pillar upper cover assy.	1		
	L9502990005	Snap button (big)	2		
3	L9815010003	L.B-pillar lower cover assy.	1		
	L9815010004	R.B-pillar lower cover assy.	1		
	Q1840612	Hexagon flange bolt	8		
	Q1840816	Hexagon flange bolt	4		

Roof panel decoration assy.

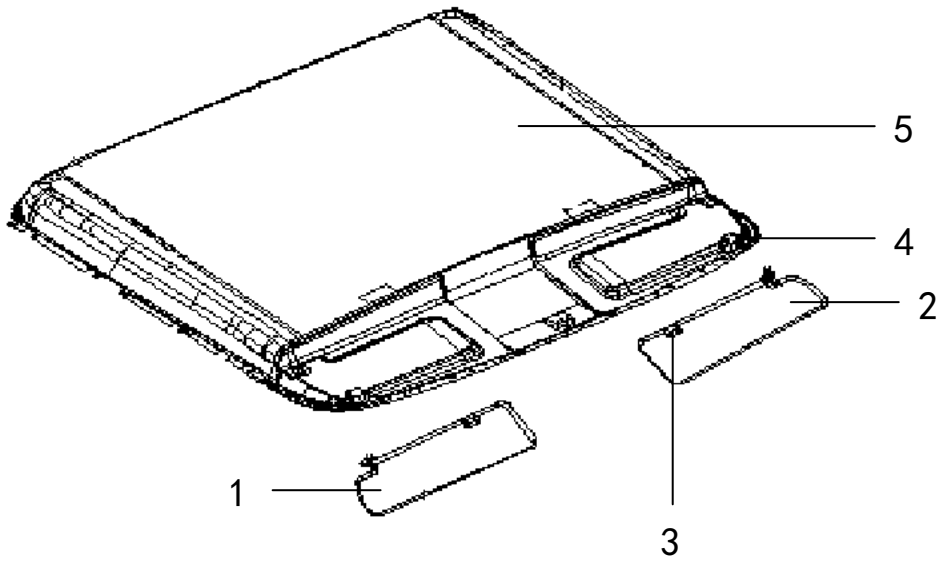

No.	Part No.	Part name	Qty.	Wearing Prt.	Remark
1	L9821020010	L. sun visor assy.	1		
2	L9821020020	R. sun visor assy.	1		
3	L9821020011	Clip, sun visor	2		
4	L9821020012	Plastic nut-sun visor	2		
	L9502990005	Snap button (big)	12		
5	L9818010001	Inner cover assy. Roof panel	1		
	Q2710540	Cross recessed semi-circular tapping screw	4		
	Q2710520	Cross recessed semi-circular tapping screw	2		
	Q40105	Plain washer	6		

Sunroof assy.

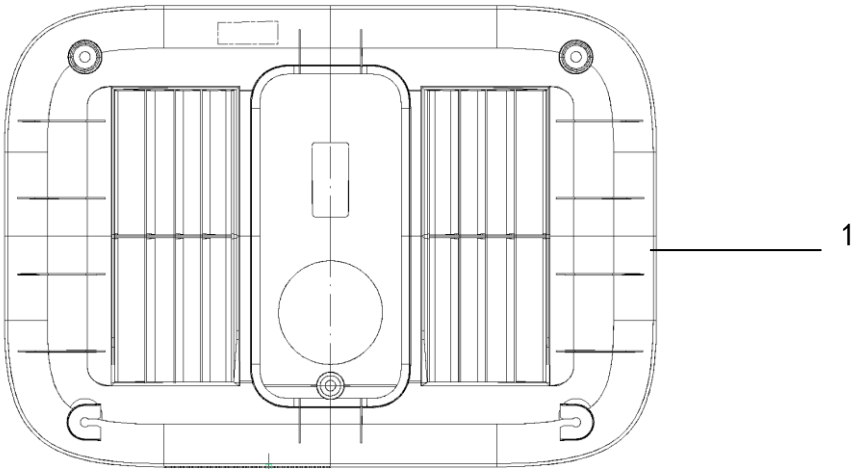

No.	Part No.	Part name	Qty.	Wearing Prt.	Remark
1	L9823100030	Roof panel window assy.	1		
	L9823100010	Window-blinds assy.	1		

Seatbelt assy.

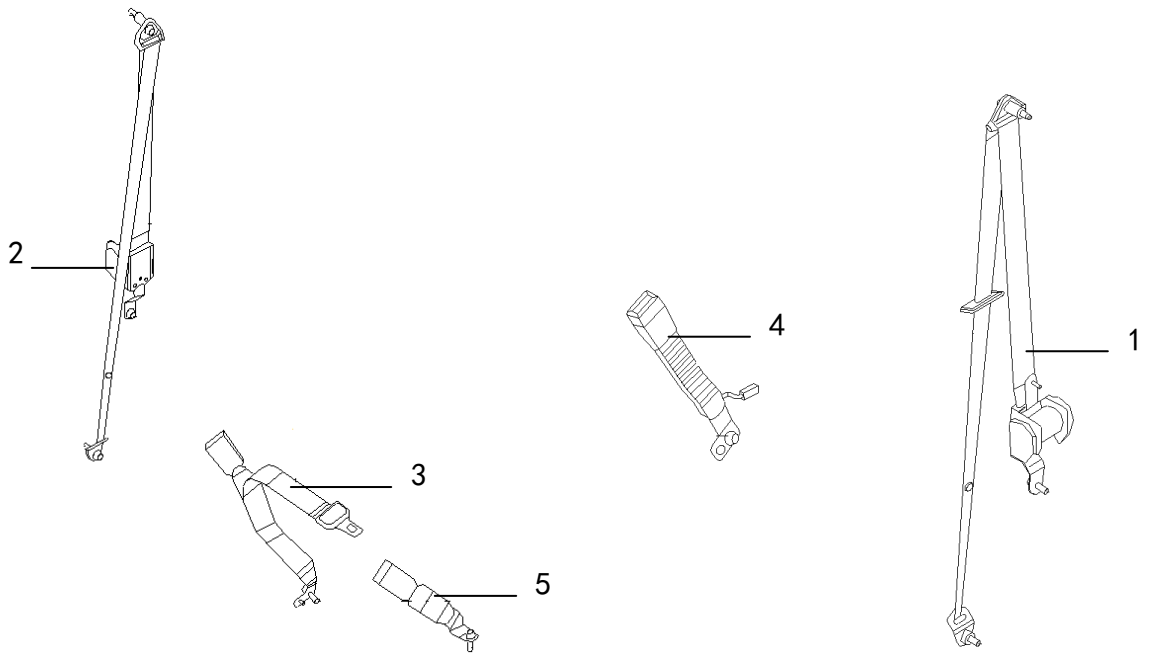

No.	Part No.	Part name	Qty.	Wearing Prt.	Remark
1	L9505040010	Belt retractor assy. Driver	1		
2	L9505040020	Belt retractor assy. Passenger	1		
3	L9505040030	Middle seat belt assy.	1		
4	L9505040040	Insert lock assy. driver	1		
5	L9505040050	Insert lock assy. middle	1		
	58T1-11013	Hexagon flange bolt- with guide post at tail 7/16"(BS）X29	11		
	58T1-11015	Serrated lock washer with internal teeth (plastic)	11		

Door assy.

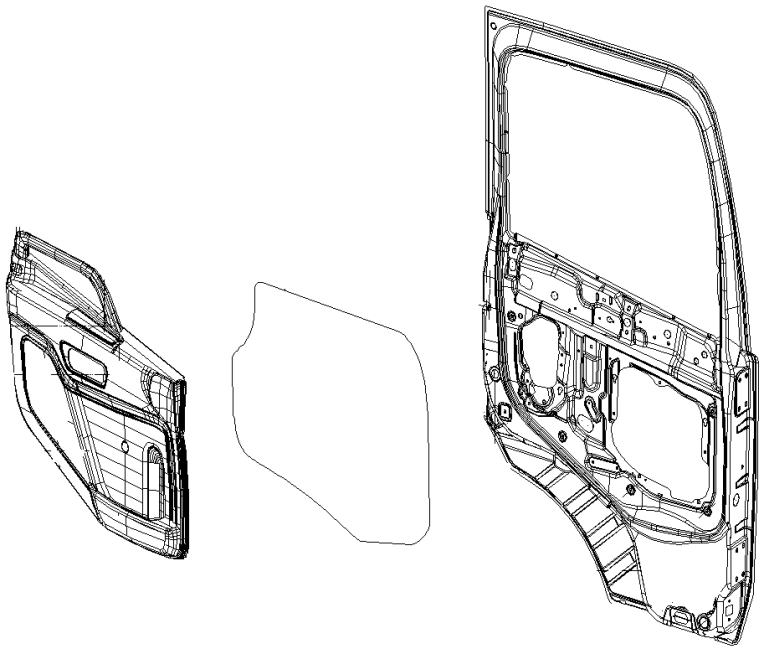

No.	Part No.	Part name	Qty.	Wearing Prt.	Remark
1	L9502030010	L. assist handle	1		
2	L9502030020	R. assist handle	1		
3	L9502070010	L. door inner cover	1		
4	L9502070020	R. door inner cover	1		
	Q2140612	Cross recessed round head screw	6		
	Q2710410	Cross recessed round tapping screw	2		
5	L9502050010	L. door inner decorative plate assy.	1		
6	L9502050020	R. door inner decorative plate assy.	1		
7	54T1-02035	Snap button	2		
8	L9502050030	L. screw cover	1		
9	L9502050040	R. screw cover	1		
10	L9502050050	L. door switch panel	1		
11	L9502050060	R. door switch panel	1		
12	L9502050070	L. door glove box	1		
13	L9502050080	R. door glove box	1		
14	L9502990050	Glove box bracket	2		
	Q271518	Cross recessed round tapping screw	6		
	Q40206	Plain washer	2		
15	L9502990001	L. door sealing film assy.	1		
16	L9502990002	R. door sealing film assy.	1		

Door assy.

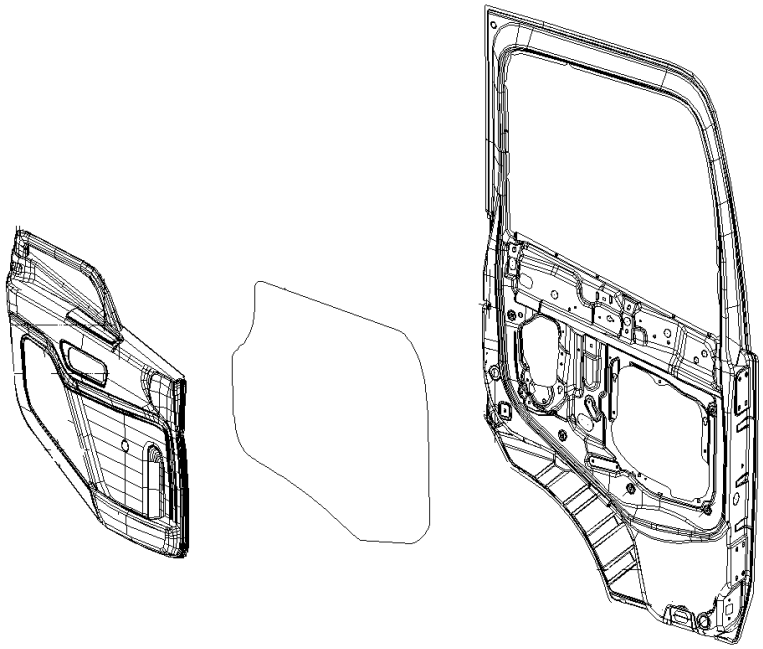

No.	Part No.	Part name	Qty.	Wearing Prt.	Remark
17	L9502080010	L. door rocking handle	2		
18	L9502080030	L. door glass regulator assy.	1		
19	L9502080040	R. door glass regulator assy.	1		
20	L9502020010	L. door glass channel	1		
21	L9502020020	R. door glass channel	1		
22	L9502070050	L. door exterior handle assy.	1		
23	L9502070060	R. door exterior handle assy.	1		
	Q2140612	Cross recessed round head screw	4		
24	L9502070030	L. door interior handle assy.	1		
25	L9502070040	R. door interior handle assy.	1		
26	L9502990010	L. fender（Lower trim, door）	1		
27	L9502990020	R. fender（Lower trim, door）	1		
	54T1-02035	Snap button	6		
	Q2710612	Cross recessed round tapping screw	4		
	Q1000	Square plastic nut	4		

Window glass assy.

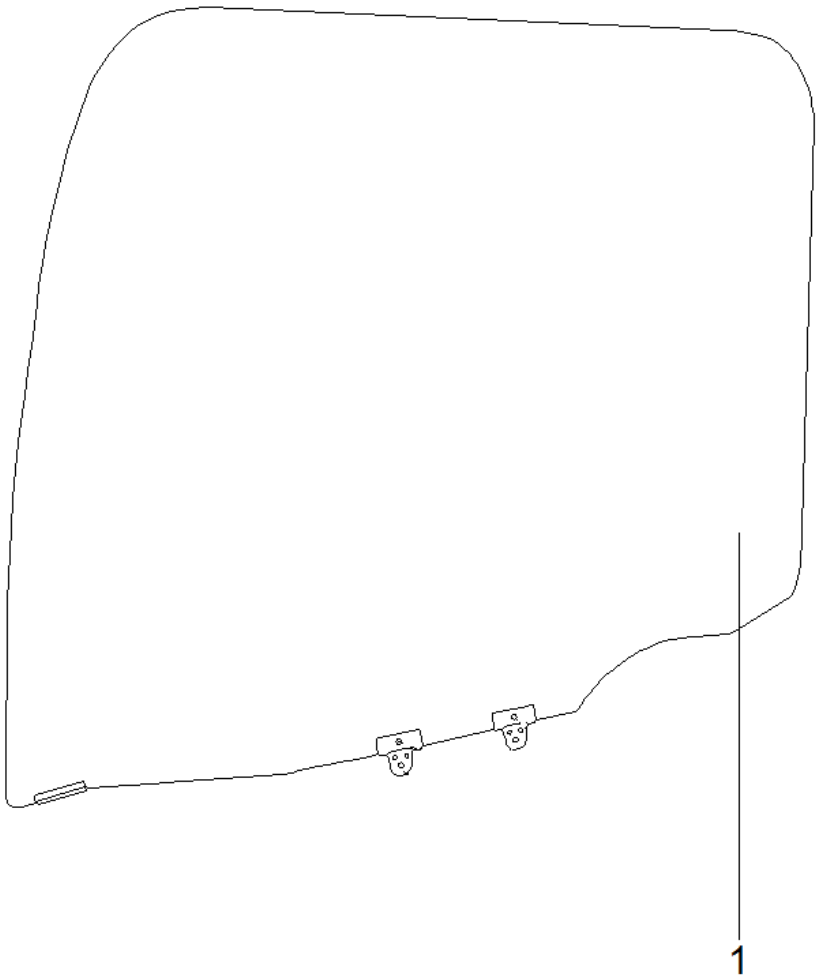

No.	Part No.	Part name	Qty.	Wearing Prt.	Remark
1	L9502010010	L. door glass	1		
	L9502010020	R. door glass	1		

Door glass regulator assy.

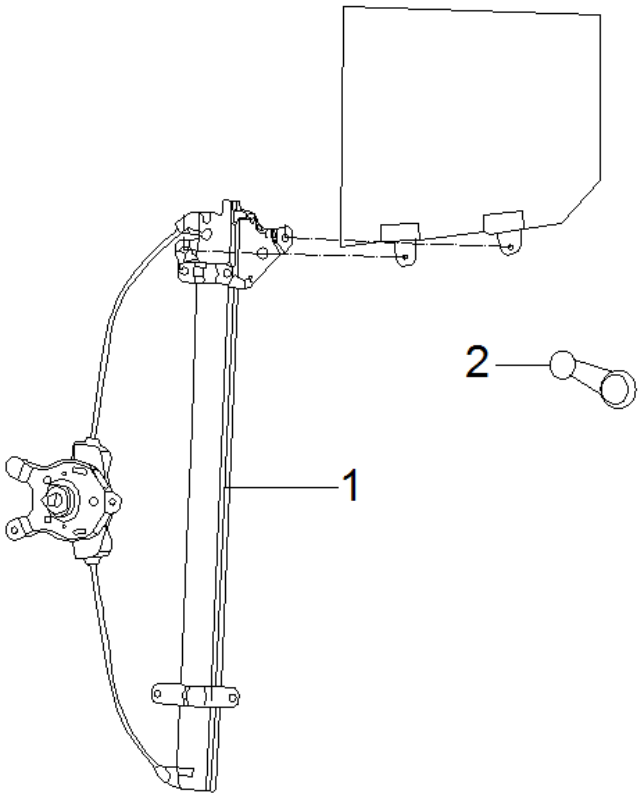

No.	Part No.	Part name	Qty.	Wearing Prt.	Remark
1	L9502080030	L. door glass regulator assy.	1		
	L9502080040	R. door glass regulator assy.	1		
2	L9502080010	Door rocker handle	2		
	Q1840612	Cross recessed round head screw	8		
	Q32006	Hexagon flange nut	4		
	Q40306	Spring washer	6		

Door lock assy.

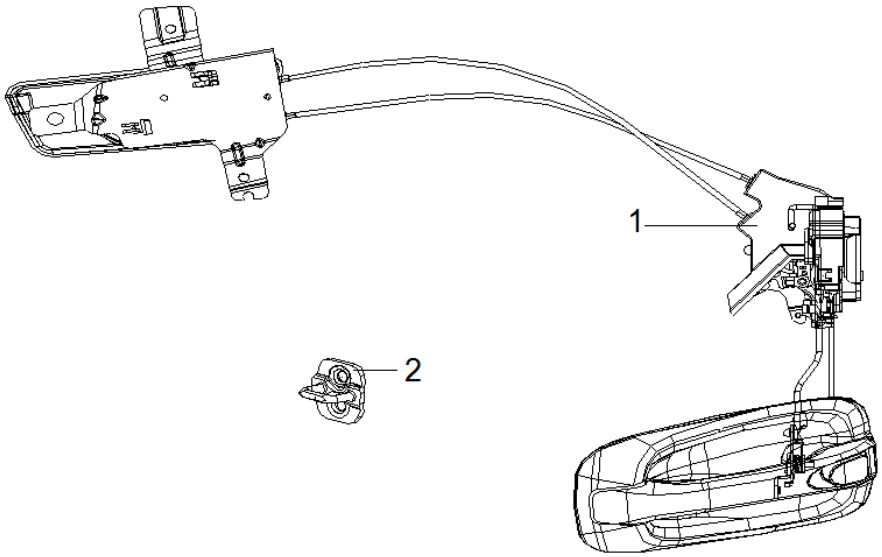

No.	Part No.	Part name	Qty.	Wearing Prt.	Remark
1	L9502060010	L. door lock and connecting rod assy.	1		
	L9502060020	R. door lock and connecting rod assy.	1		
	Q2510514	Inner hexagon countersunk screw	6		
2	L9502060030	Door lock assy.	2		
	Q2510514	Inner hexagon countersunk screw	4		

Door seal assy.

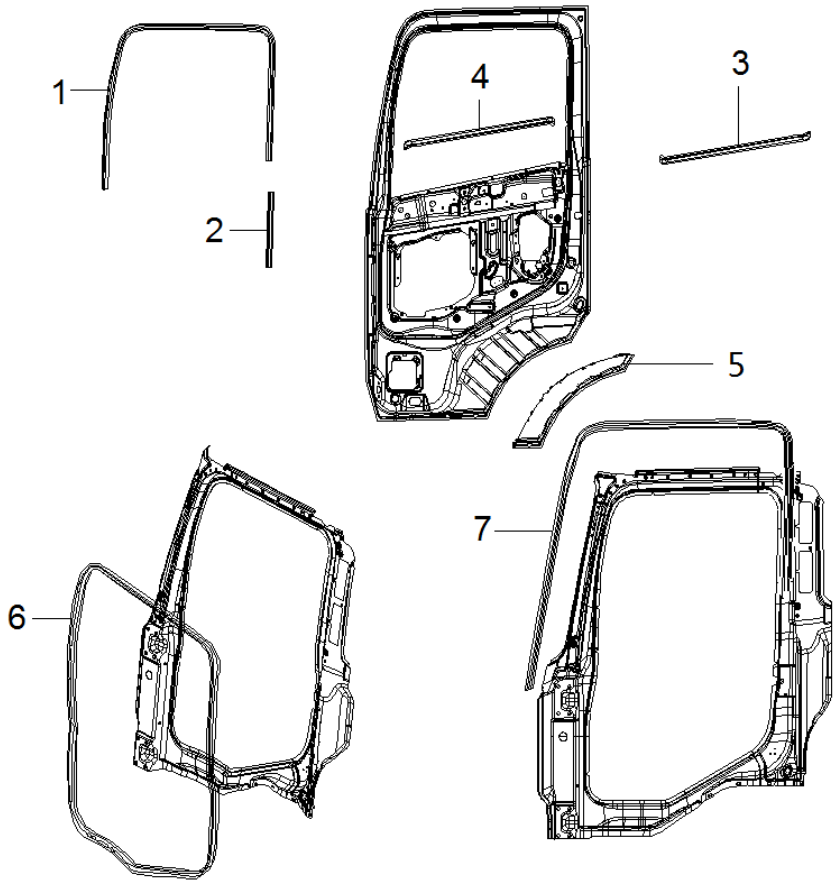

No.	Part No.	Part name	Qty.	Wearing Prt.	Remark
1	L9502040050	L. door glass mud ditch	1		
	L9502040060	R. door glass mud ditch	1		
2	L9502040001	L. door lower guide rail seal	1		
	L9502040002	R. door lower guide rail seal	1		
3	L9502040010	L. door glass exterior trimming strip	1		
	L9502040020	R. door glass exterior trimming strip	1		
4	L9502040030	L. door glass interior trimming strip	1		
	L9502040040	R. door glass interior trimming strip	1		
5	L9502990030	Lwr. trimming strip assy. L. fender	1		
	L9502990040	Lwr. Trimming strip assy. R. fender	1		
6	L9502040070	Upr. Trimming strip assy. L. door	1		
	L9502040080	Upr. Trimming strip assy. R. door	1		
7	L9815010005	L. door seal (door frame)	1		
	L9815010006	R. door seal (door frame)	1		

Passenger seat

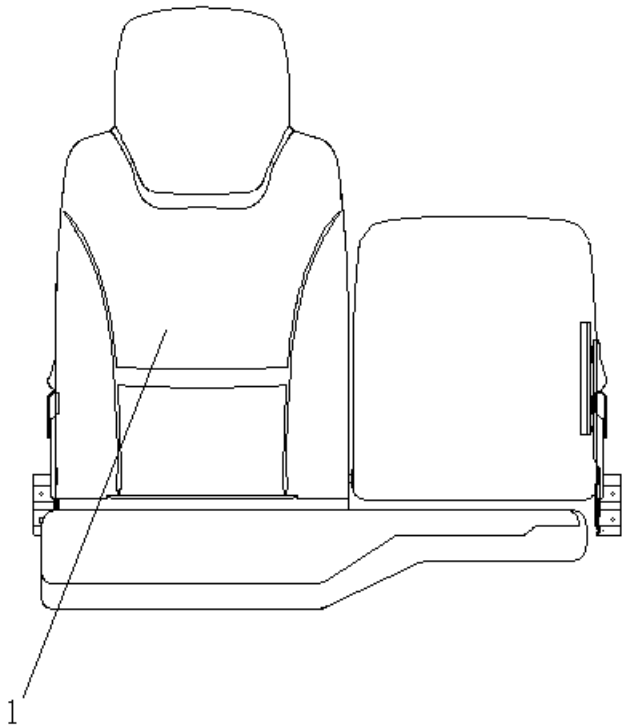

No.	Part No.	Part name	Qty.	Wearing Prt.	Remark
1	L9505020110	Passenger seat assy.	1		
	Q1500820	Hexagon bolt	7		
	Q40108	Plain washer	7		
	Q40308	Spring washer	7		

Driver’s seat

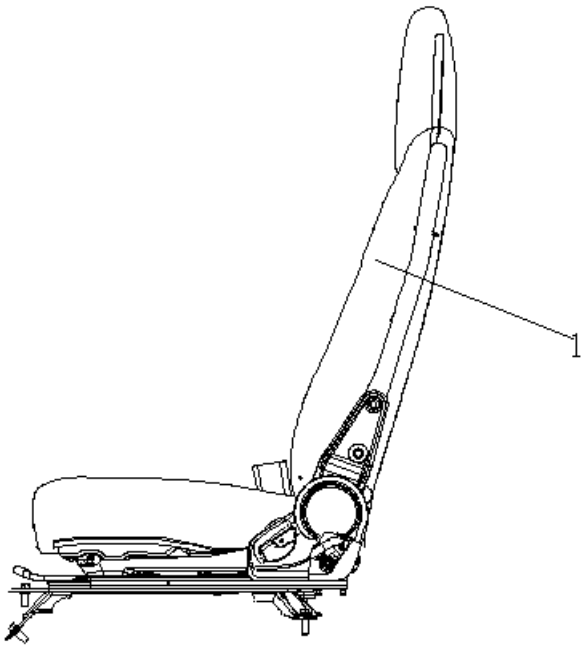

No.	Part No.	Part name	Qty.	Wearing Prt.	Remark
1	L9505010010	Driver’s seat assy.	1		
	Q1501025	Hexagon bolt	3		
	40310	Hexagon nut	1		
	40110	Plain washer	4		
	40310	Spring washer	4		

Bed

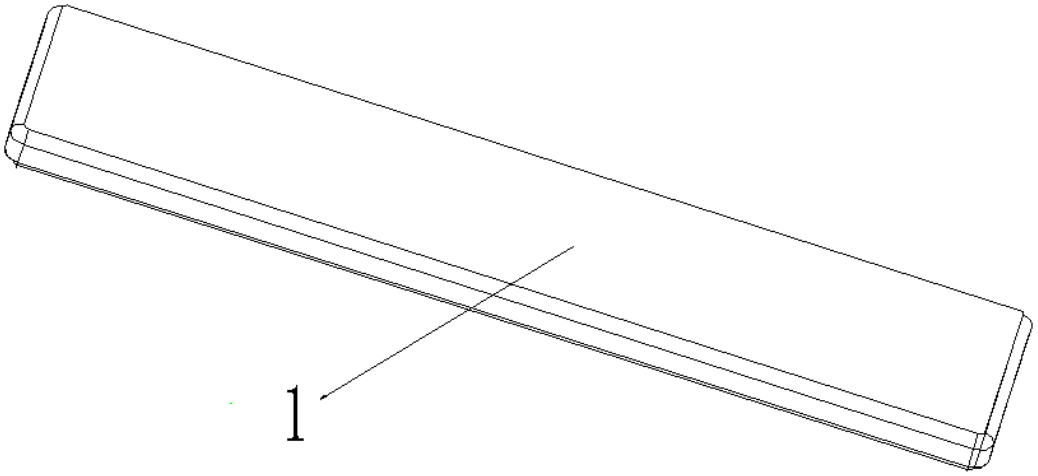

No.	Part No.	Part name	Qty.	Wearing Prt.	Remark
1	L9506010010	Lower bed	1		

Air conditioner assy.

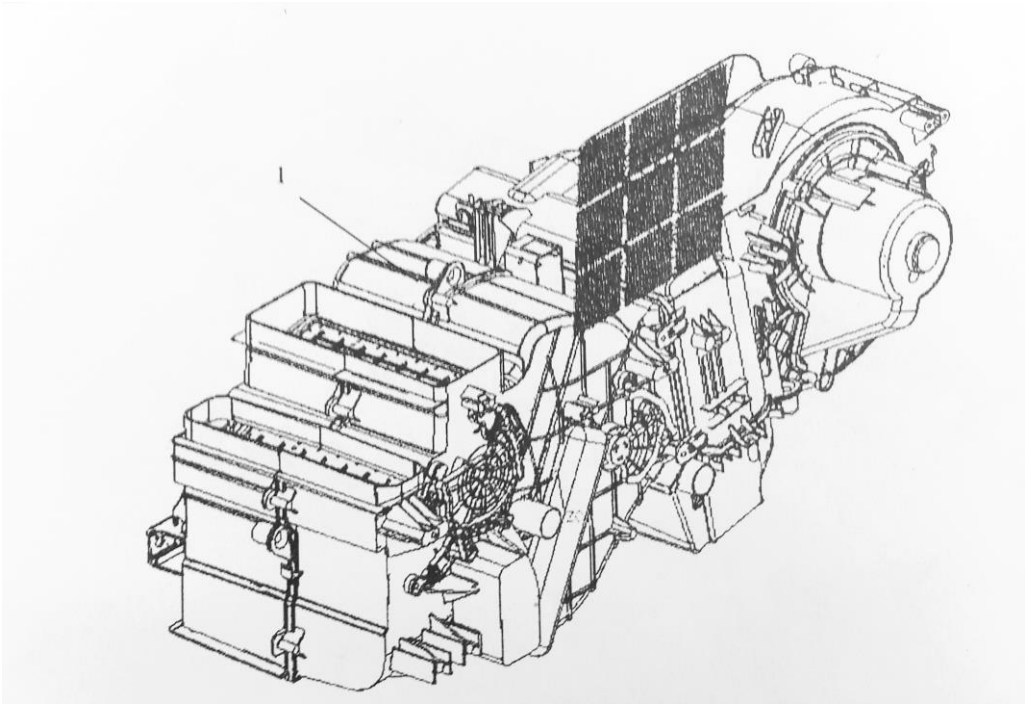

No.	Part No.	Part name	Qty.	Wearing Prt.	Remark
1	L9811010010	Air conditioner assy. With blower	1		
	Q1840625	Hexagon flange bolt	3		
	Q1840820	Hexagon flange bolt	2		
	Q40206	Plain washer	3		

Air conditioner operation mechanism

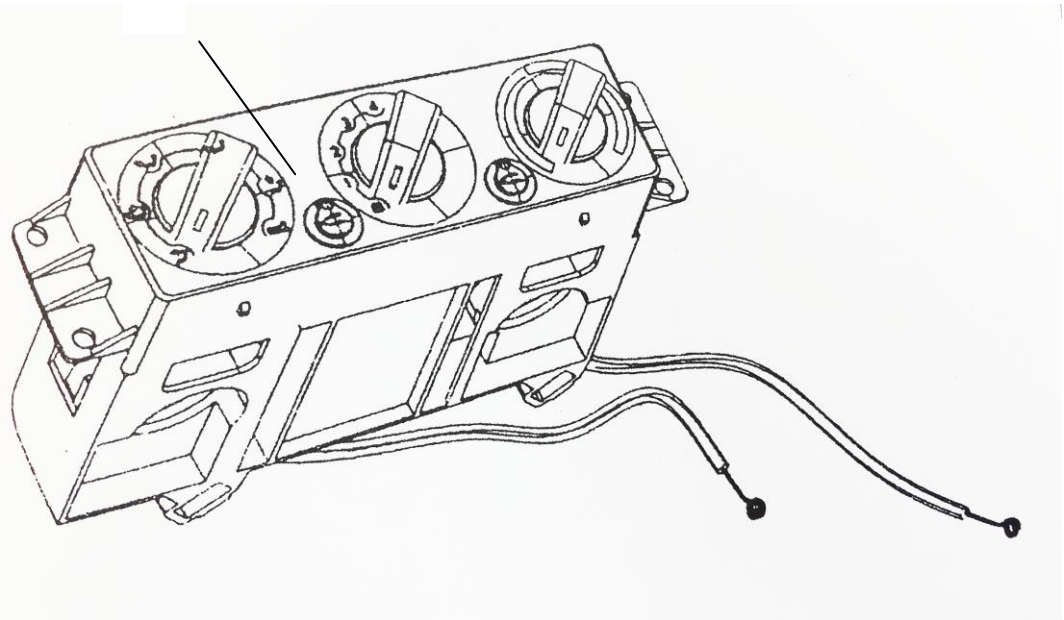

No.	Part No.	Part name	Qty.	Wearing Prt.	Remark
1	L9811030010	Air conditioner operation mechanism	1		
	Q2710514	With cross recessed semi-circular tapping screw	8		
	Q2710616	With cross recessed semi-circular tapping screw	4		
	Q1840616	Hexagon flange bolt	1		

Inner assisting handle

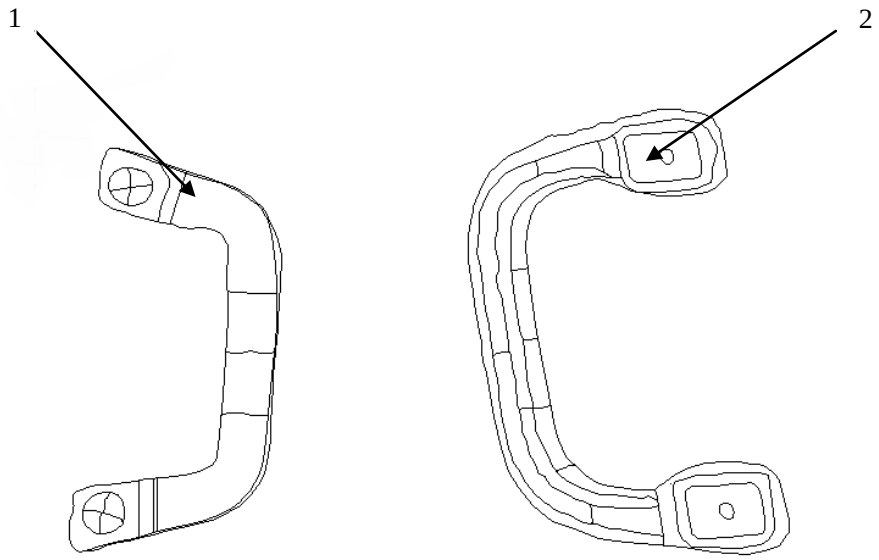

No.	Part No.	Part name	Qty.	Wearing Prt.	Remark
1	L9816010010	A-pillar handle	2		
	Q1840620	Hexagon flange bolt	4		
2	L9816050010	Assisting handle on door frame	1		
	Q2140618	Cross recessed round head screw	4		

Fr. Mudguard plate assy.

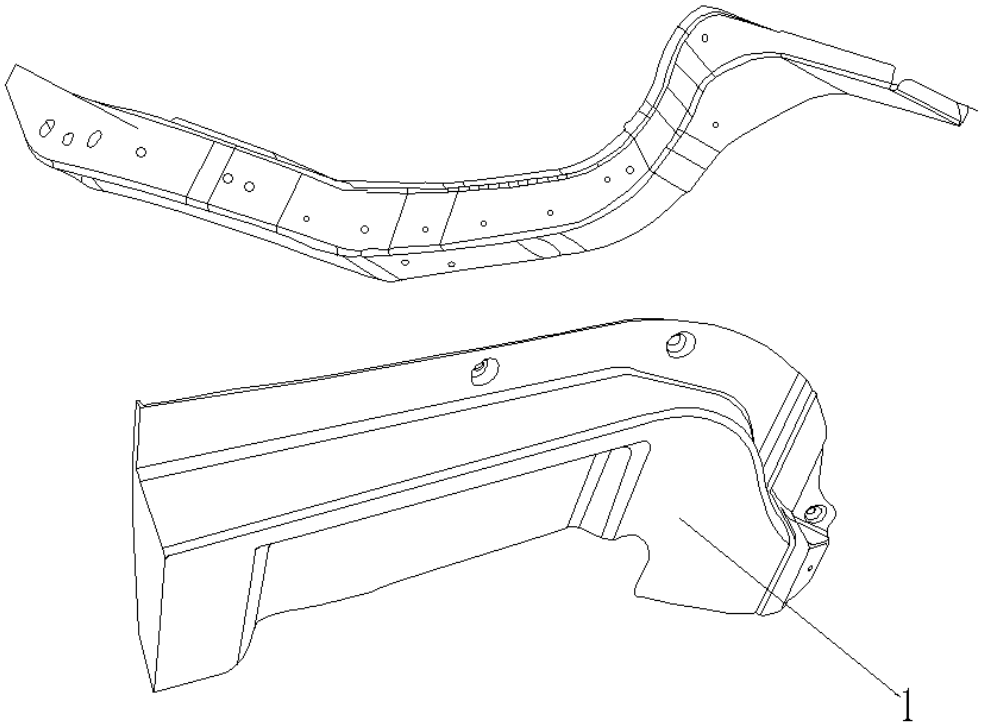

No.	Part No.	Part name	Qty.	Wearing Prt.	Remark
1	L9827030001	L. fr. mudguard	1		
	L9827030002	R. fr. mudguard	1		
	Q1840820	Hexagon flange bolt	6		

Fender assy. door

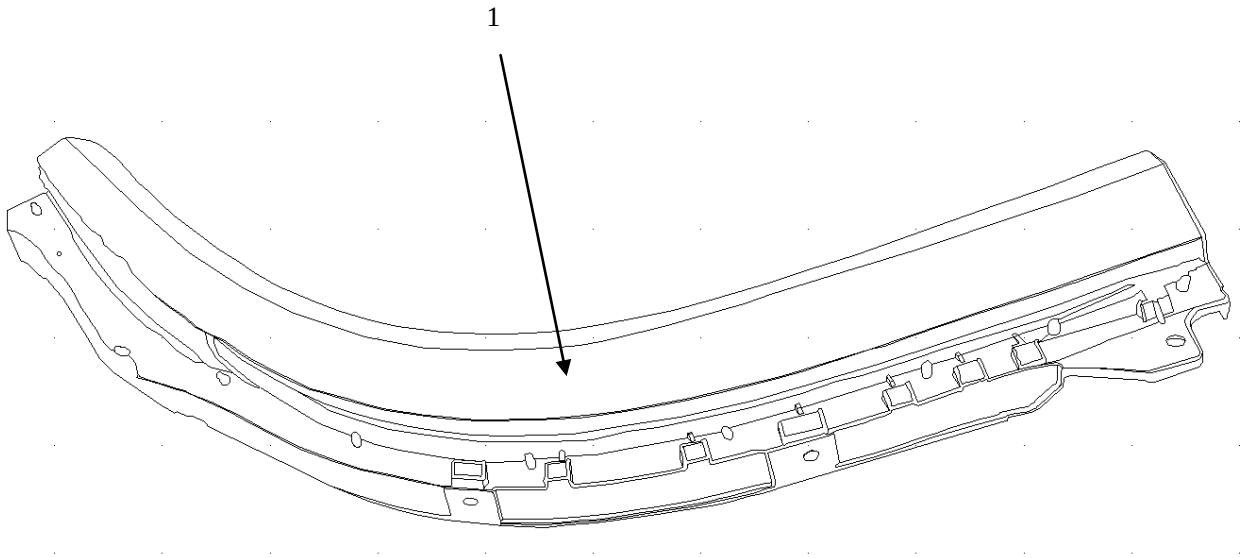

No.	Part No.	Part name	Qty.	Wearing Prt.	Remark
1	L9502990020	R. fender（door lower fender）	1		
	Q1000	Square plastic nut	4		
	54T1-02035	Clip	6		
	Q2140612	With cross recessed round head screw	4		

Door fender assy.

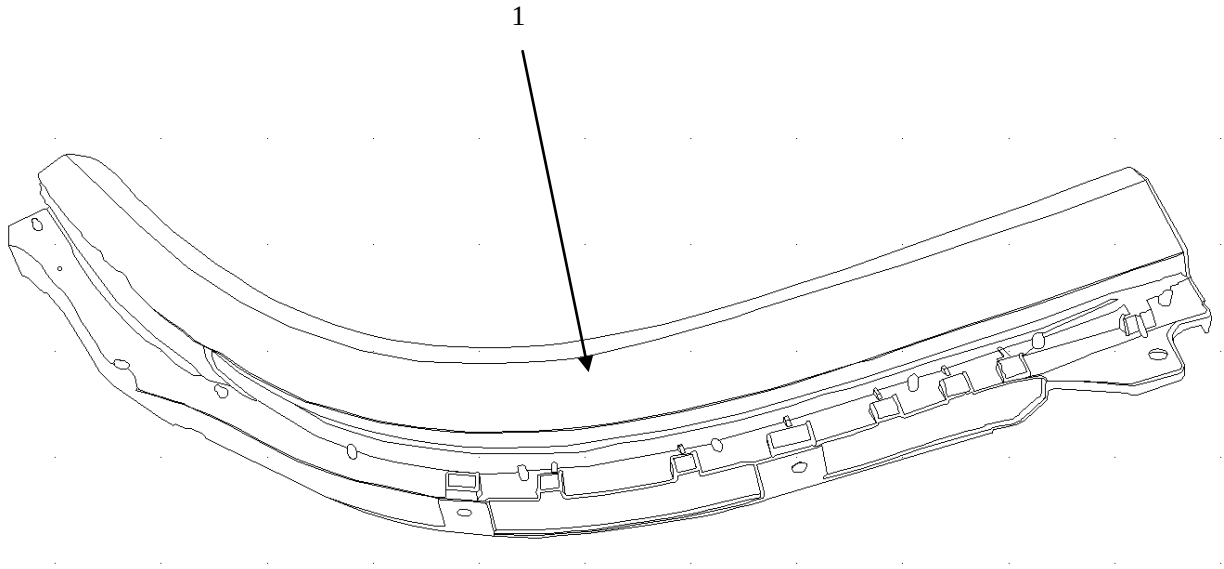

No.	Part No.	Part name	Qty.	Wearing Prt.	Remark
1	L9502990010	L. fender（symmetrical with R. fender）	1		
	Q1000	（Square plastic nut）	4		
	54T1-02035	Clip	6		
	Q2140612	With cross recessed round head screw	4		

Bumper assy.

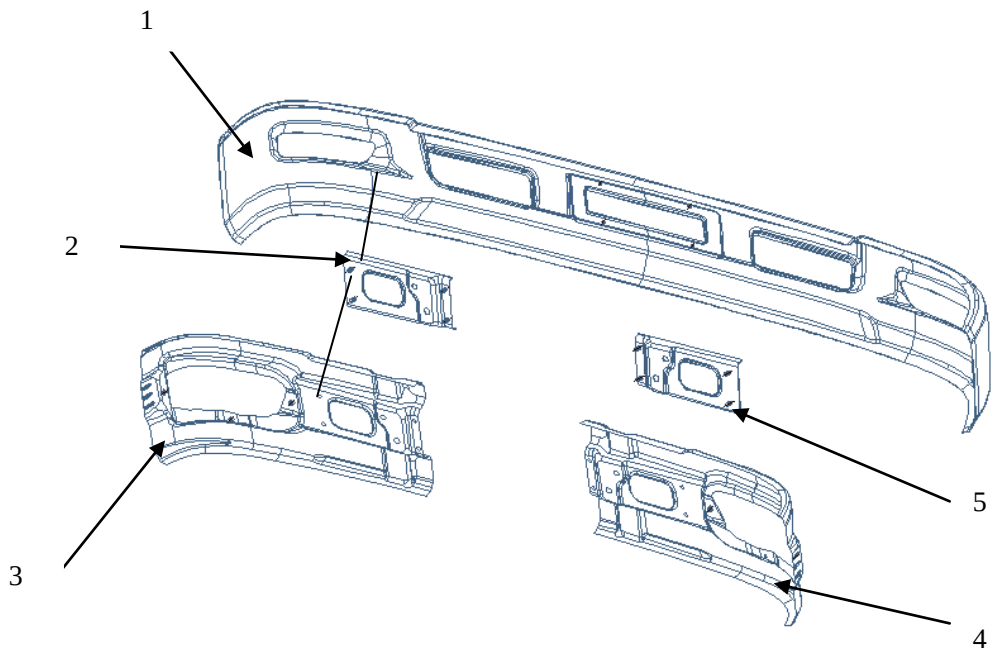

No.	Part No.	Part name	Qty.	Wearing Prt.	Remark
1	L95190100010	Bumper body assy.	1		
	L95190100001	Bumper body	1		
	Q37106	M6 welding nut	4		
2	L9519010050	Sub-assy. L. inner lining plate, bumper	1		
	L9519010005	L. inner lining plate, bumper	1		
	Q1980815	M8X15 welding bolt	4		
3	L9519010030	Sub-assy. L. Reinforce plate, bumper	1		
	L9519010003	L. reinforce plate, bumper	5		
	Q37106	M6 welding nut	3		
4	L9519010040	Sub-assy. R. Reinforce plate, bumper	1		
	L9519010004	R. reinforce plate, bumper	5		
	Q37106	M6 welding nut	3		
5	L9519010060	Sub-assy. R. inner lining plate, bumper	1		
	L9519010006	R. inner lining plate, bumper	1		
	Q1980815	M8X15 welding bolt	4		

Cabin wiring harness

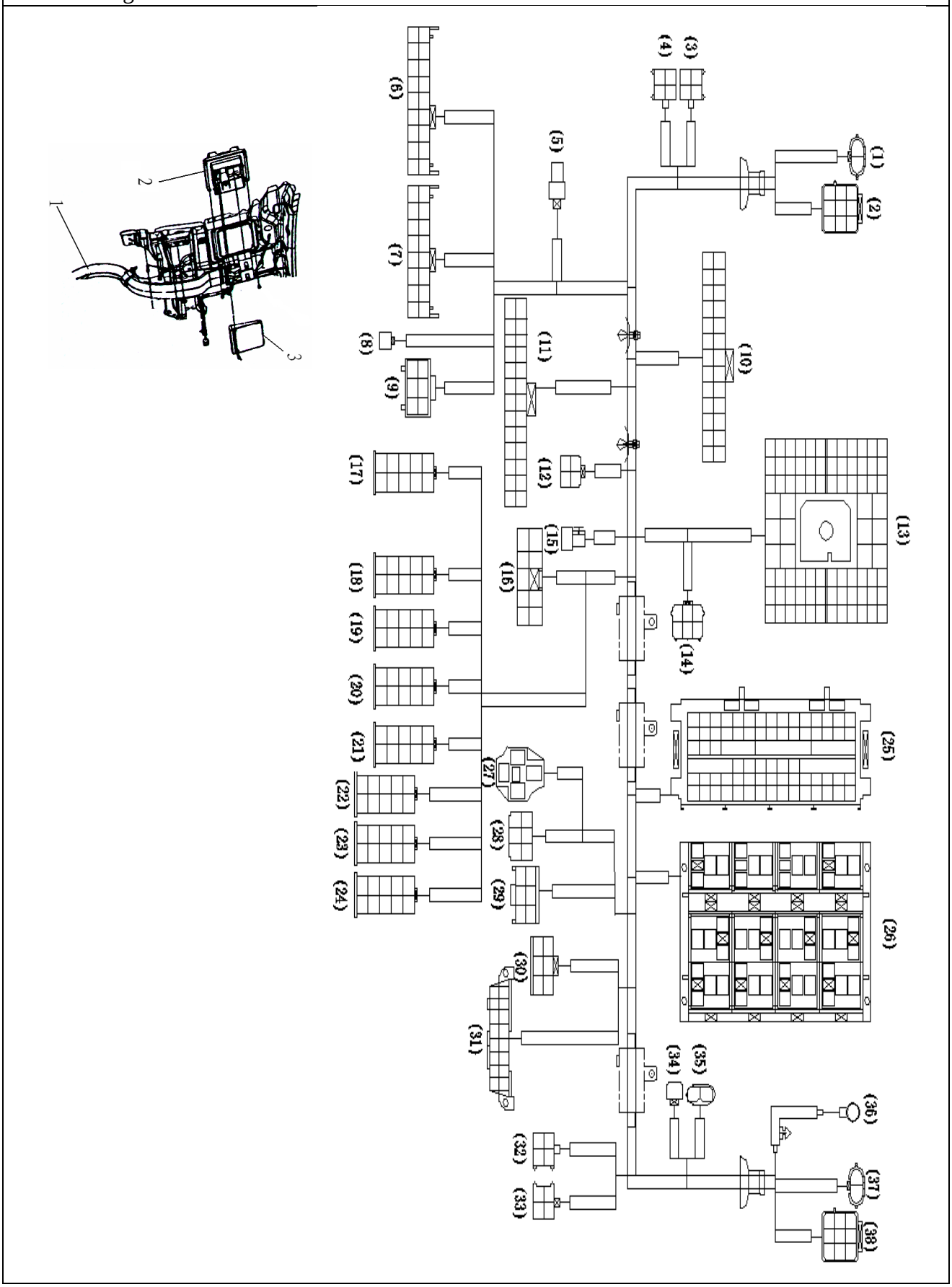

Cabin wiring harness					
No.	Part No.	Part name	Qty.	Wearing Prt.	Remark
1	L9374015010	Cabin main wiring harness	1		
2	L9375160010	SMJ plug box	1		
3	L9375160020	SMJ plug box cover	1		
	Q32006	Hexagon flange nut	4		
		（1）-connect L. fr.fog lamp			
		（2）-connect L. fr. headlamp			
		（3）-connect L. floor wire			
		（4）-connect L. door wire			
		（5）-connect clutch wire			
		（6）-connect combination switch（lights）			
		（7）-connect combination switch（wiper）			
		（8）-connect horn switch			
		（9）-connect ignition lock			
		（10）-connect meter（blue）			
		（11）-connect meter（yellow）			
		（12）-connect brake switch			
		（13）-connect chassis wiring			
		（14）-connect electronic acceleration			
		（15）-connect cigar lighter			
		（16）-connect radio			
		（17）-connect alarm switch			
		（18）-connect horn change-over switch			
		（19）-connect dryer switch			
		（20）-connect fr. Fog lamp switch			
		（21）-connect PTO switch			
		（22）-connect diagnosis switch			
		（23）-connect idle enabling switch			

		（24）-connect idle adjusting switch			
		（25）-connect fuse box			
		（26）-connect relay seat			
		（27）-connect flasher controller			
		（28）-connect intermittent wiper relay			
		（29）-connect air condition switch			
		（30）-connect wiper motor			
		（31）-connect diagnosis plug			
		（32）-connect R. door wire			
		（33）-connect roof wiring			
		（34）-connect R. floor wire			
		（35）-connect spray motor			
		（36）-connect ground wire			
		（37）-connect R. fr.fog lamp			
		（38）-connect R. front headlamp			

Fuse box assy.

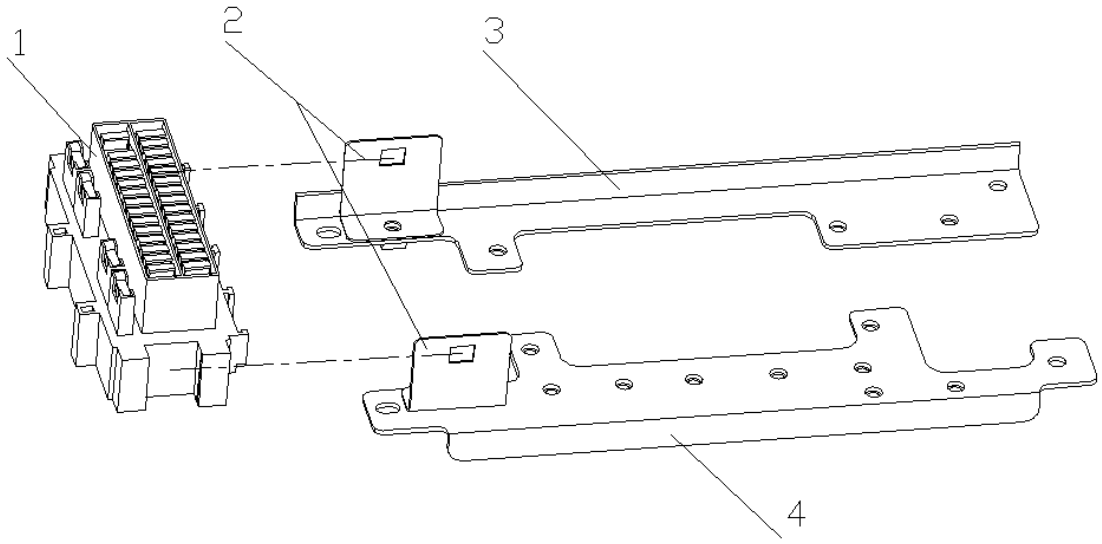

No.	Part No.	Part name	Qty.	Wearing Prt.	Remark
1	37T1-24011	Fuse box assy.	1		
2	L9503020093	Fuse box bracket	2		
3	L9503020050	Upper bracket assy. Electrical equipment installation plate	1		
4	L9503020070	Lower bracket assy. Electrical equipment installation plate	1		

Door wiring harness

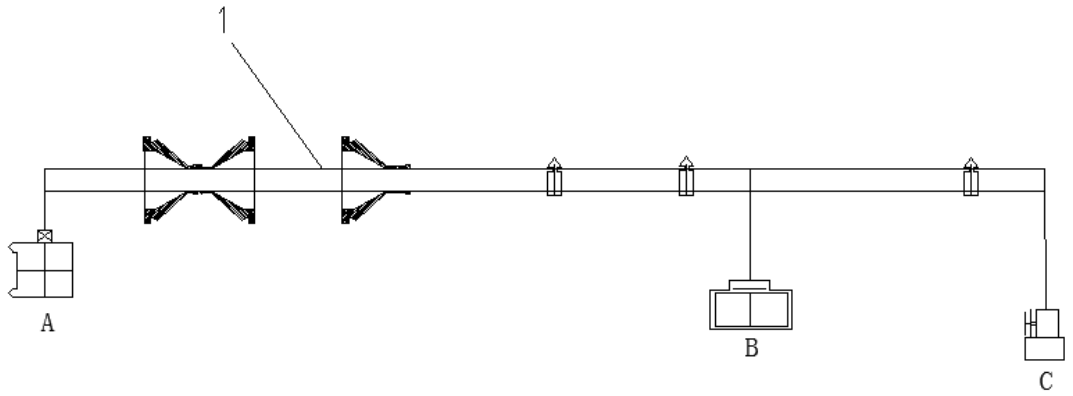

No.	Part No.	Part name	Qty.	Wearing Prt.	Remark
1	L9374013010	Door wiring harness assy.	2		
		A-connect main harness			
		B-connect steering lamp			
		C-connect loudspeaker			

Roof wiring harness

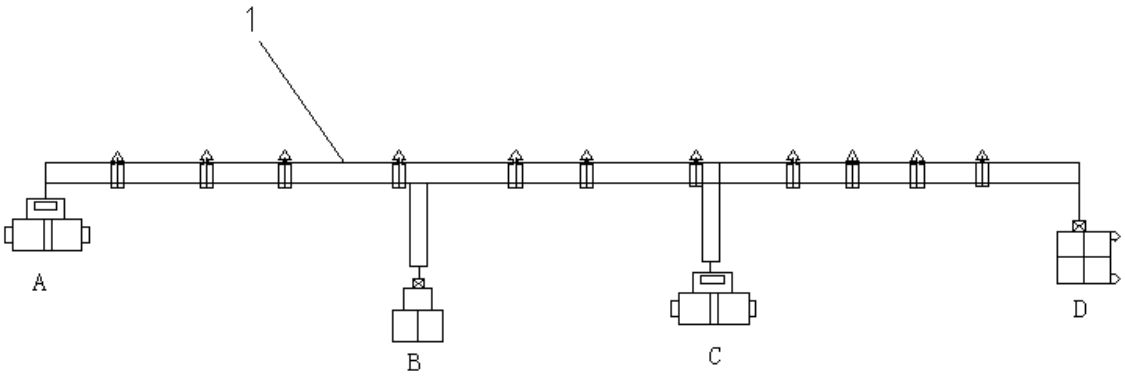

No.	Part No.	Part name	Qty.	Wearing Prt.	Remark
1	L9374012010	Roof wiring harness	1		
		A-connect height-indicator			
		B-connect reading lamp			
		C-connect height-indicator			
		D-connect main harness			

Floor wiring harness

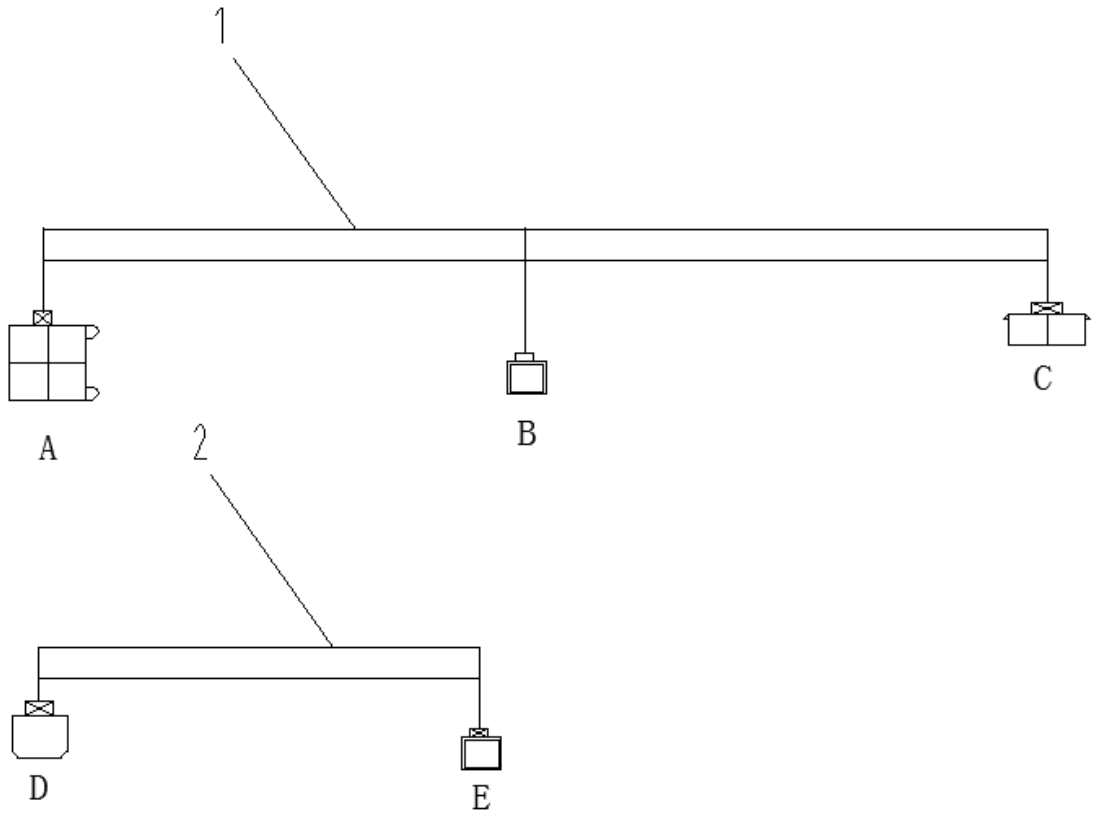

No.	Part No.	Part name	Qty.	Wearing Prt.	Remark
1	L9374010010	L. floor wiring harness	1		
2	L9374011010	R. floor wiring harness			
		A-connect main wiring harness			
		B-connect door lamp			
		C-connect seat belt			
		D-connect main wiring harness			
		E-connect door lamp			

Roof lamp

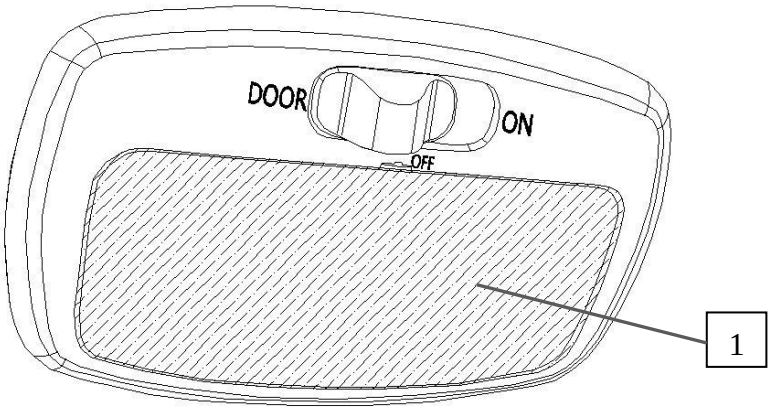

No.	Part No.	Part name	Qty.	Wearing Prt.	Remark
1	L9371100010	Roof lamp assy.	1		

Side steering lamp assy.

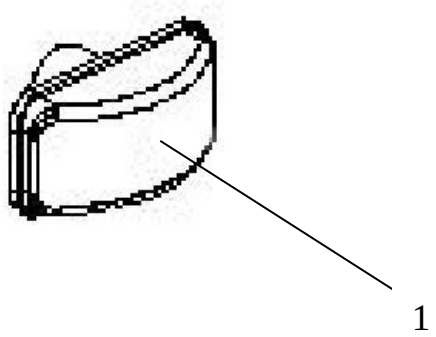

No.	Part No.	Part name	Qty.	Wearing Prt.	Remark
1	L9371050010	L. steering lamp assy.	1	Wearing Prt.	
	L9371050020	R. steering lamp assy.	1	Wearing Prt.	

Front height-indicator

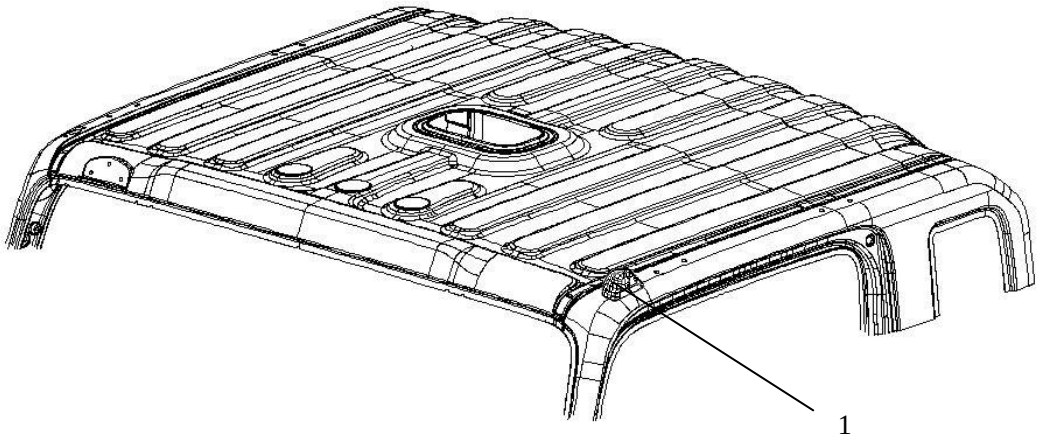

No.	Part No.	Part name	Qty.	Wearing Prt.	Remark
1	L9371090010	L. front height-indicator	1		
	L9371090020	R. front height-indicator	1		
	Q340B05	Hexagon nut	2		
	Q41705	Saddle-type spring washer	2		

Front fog lamp

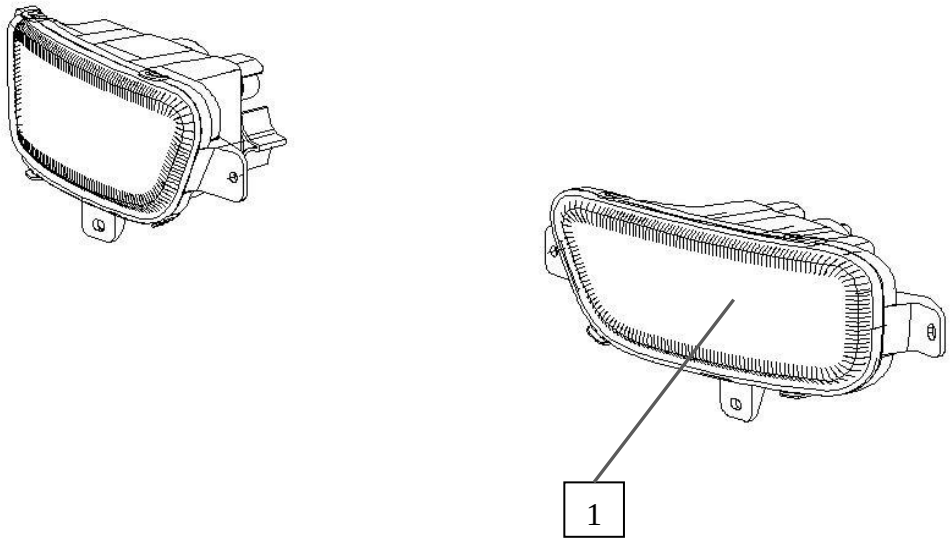

No.	Part No.	Part name	Qty.	Wearing Prt.	Remark
1	37T1-66010	L. front fog lamp	1		
	41T6-16020	R. front fog lamp	1		

Flasher assy.

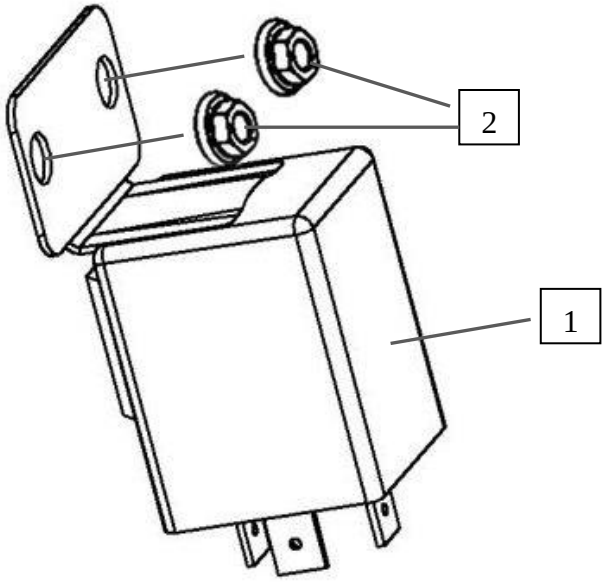

No.	Part No.	Part name	Qty.	Wearing Prt.	Remark
1	37T1-66010	Flasher assy.	1	Wearing Prt.	
2	Q340B06	Hexagon nut	2		

Alarm assy.

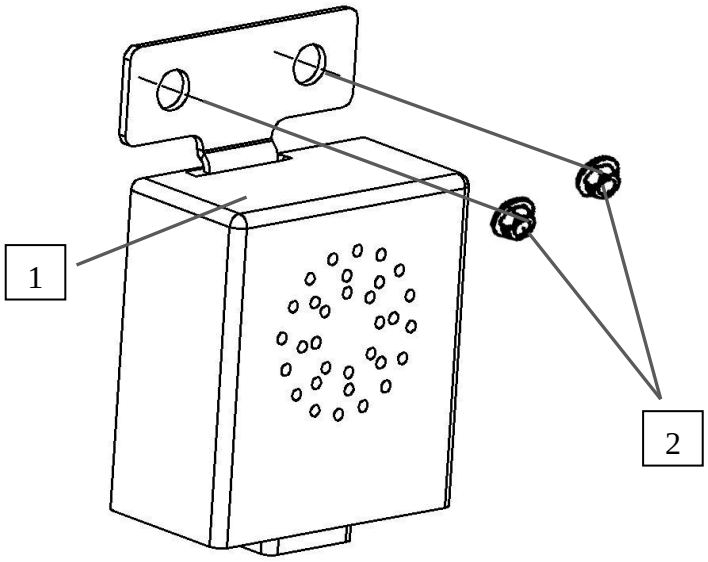

No.	Part No.	Part name	Qty.	Wearing Prt.	Remark
1	38T1-19010	Alarm assy.	1	Wearing Prt.	
	Q340B06	Hexagon nut	2		

Relay assy.

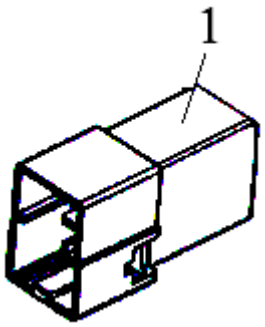

No.	Part No.	Part name	Qty.	Wearing Prt.	Remark
1	3735090-C0100	Relay	11	Wearing Prt.	

Rocker switch assy.

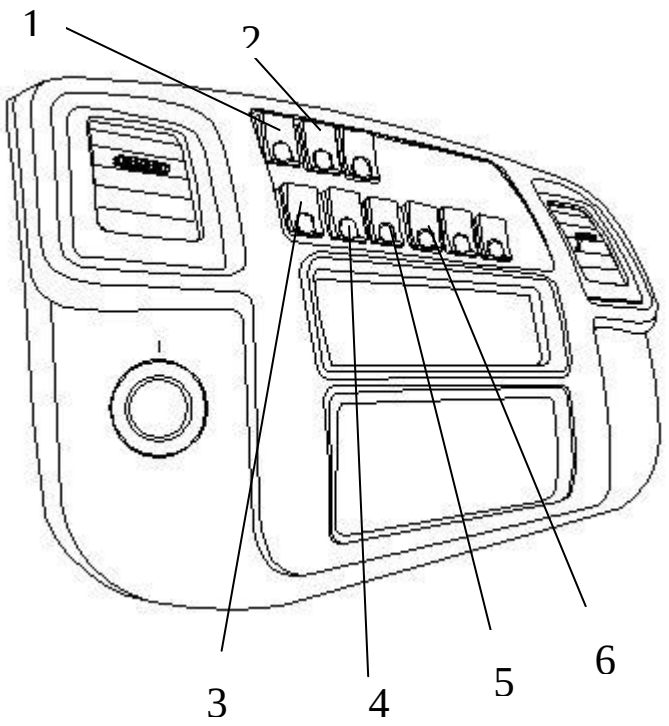

No.	Part No.	Part name	Qty.	Wearing Prt.	Remark
1	37T3-50130	Diagnosis switch	1	Wearing Prt.	
2	37T3-50150	Idle enabling switch	1	Wearing Prt.	
3	37T3-50060	Danger alarm switch	1	Wearing Prt.	
4	37T3-50020	Dryer switch	1	Wearing Prt.	
5	37T3-50010	Horn switch	1	Wearing Prt.	
6	37T3-50030	Front fog lamp switch	1	Wearing Prt.	
	37T3-50911	Rocker switch plug cover			

Door lamp switch assy.

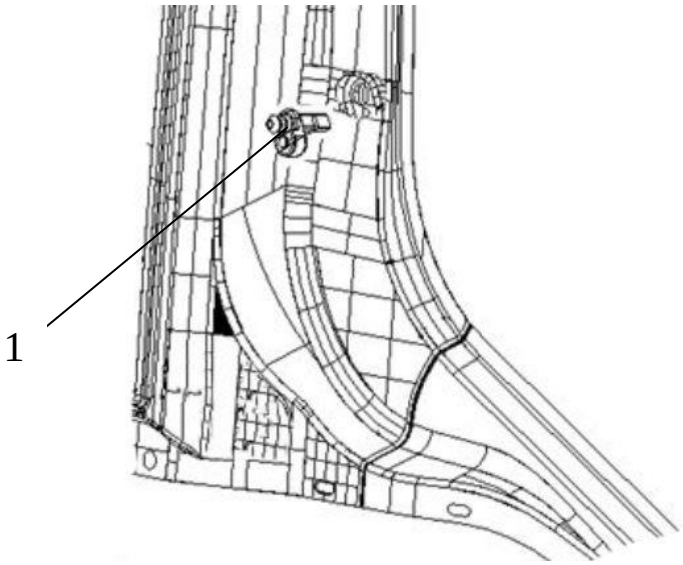

No.	Part No.	Part name	Qty.	Wearing Prt.	Remark
1	L9373050010	Door lamp switch	2	Wearing Prt.	
	Q2540430	Cross recessed countersunk screw	2		

Brake lamp / Clutch switch assy.

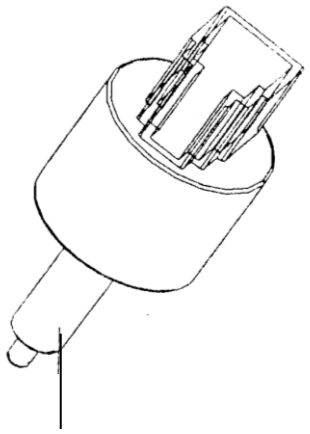

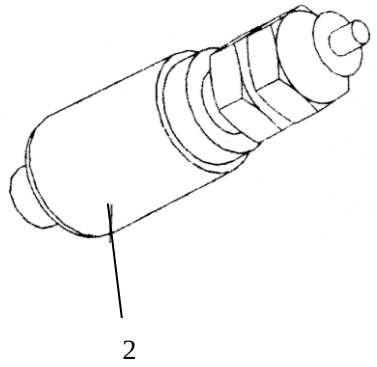

No.	Part No.	Part name	Qty.	Wearing Prt.	Remark
1	41T1-34010	Brake lamp switch assy.	1	Wearing Prt.	
2	16T1-02210	Clutch switch assy.	1	Wearing Prt.	

Front headlamp assy.

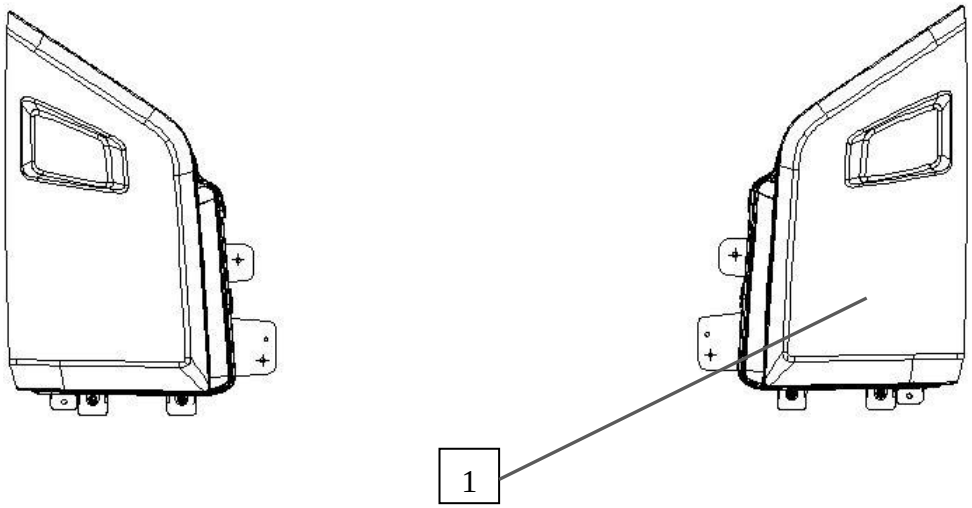

No.	Part No.	Part name	Qty.	Wearing Prt.	Remark
1	L9371020010	Fr. Headlamp assy.（L）	1		
	L9371020020	Fr. Headlamp assy.（R）	1		
2	Q340B06	Hexagon nut	4		

Combination switch

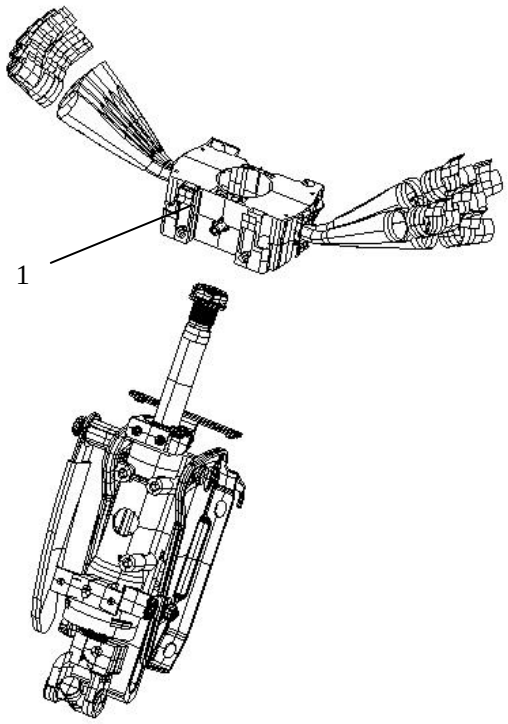

No.	Part No.	Part name	Qty.	Wearing Prt.	Remark
1	L9373020010	Combination switch assy.	1		
	Q2140520	Cross recessed pan head screw	3		
	Q40105	Plain washer	3		
	Q40305	Spring washer	3		

Combination instruments assy.

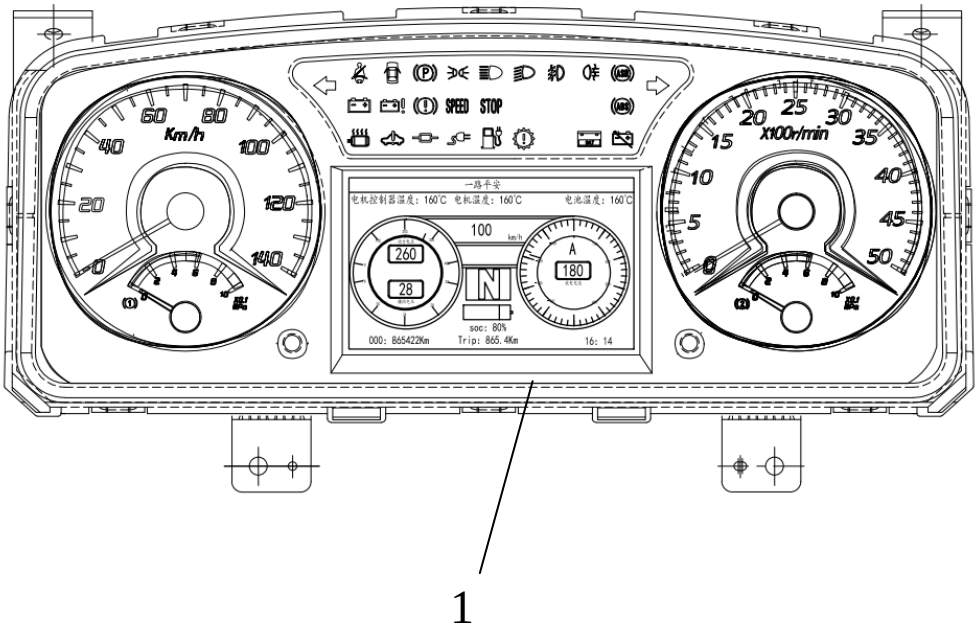

No.	Part No.	Part name	Qty.	Wearing Prt.	Remark
1	L9381010010	Instruments assy.	1	Wearing Prt.	
	Q2710540	Cross recessed round tapping screw	4		
	Q40105	Plain washer	4		

Pneumatic air pressure sensor assy.

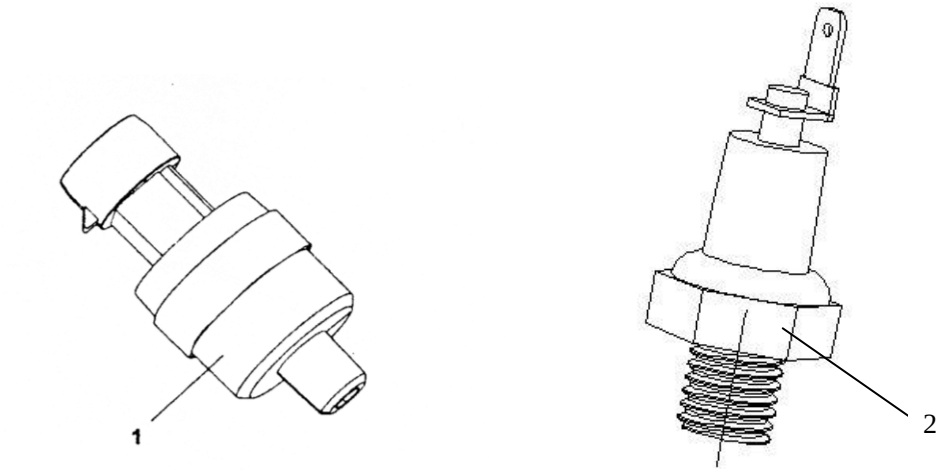

No.	Part No.	Part name	Qty.	Wearing Prt.	Remark
1	35T1-12010	Pressure sensor assy.	2	Wearing Prt.	
2	3832N3-010	Pressure alarm sensor	1	Wearing Prt.	

L/R rear view mirror

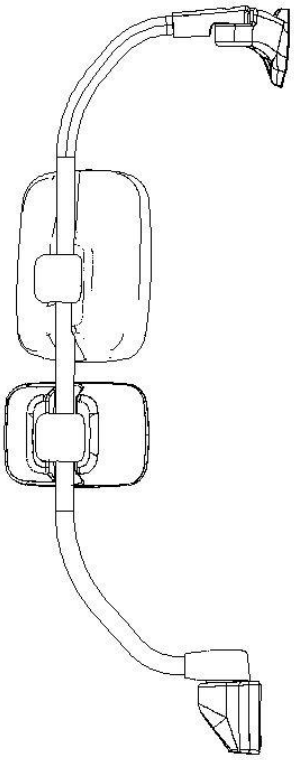

No.	Part No.	Part name	Qty.	Wearing Prt.	Remark
1	L9828010050	Exterior rear-view mirror assy.（L.&R. universal）	1		
2	L9828010060	Side under-view mirror assy.（L. & R. universal）	1		
3	L9828010030	L. exterior rear-view mirror bracket assy.	1		
4	L9828010040	R. exterior rear-view mirror bracket assy.	1		
	Q1840620	Hexagon flange bolt	6		

Front shield welding pieces

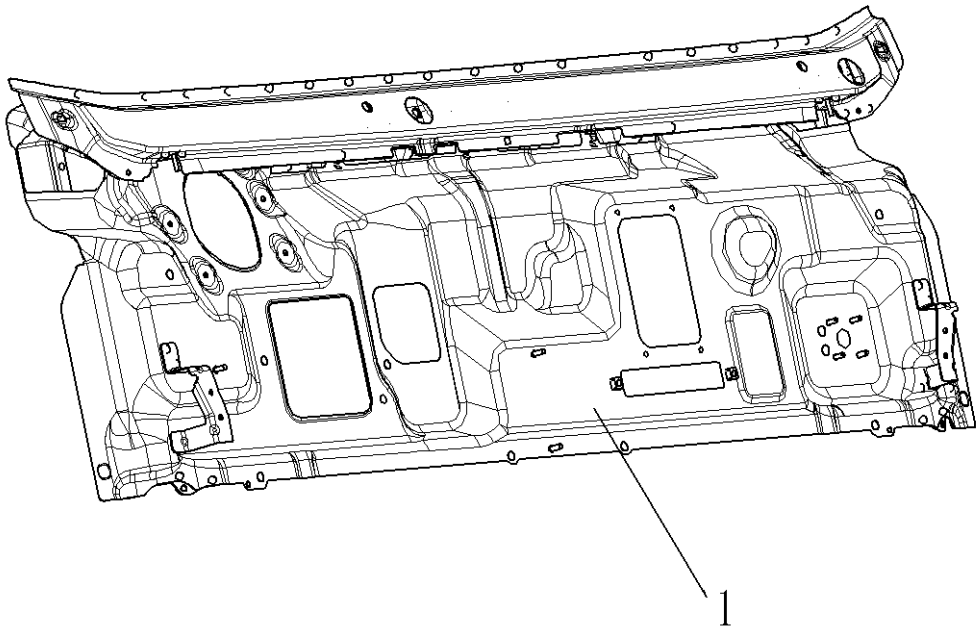

No.	Part No.	Part name	Qty.	Wearing Prt.	Remark
1	L9501020000	Front shield assy.	1		

Floor welding pieces

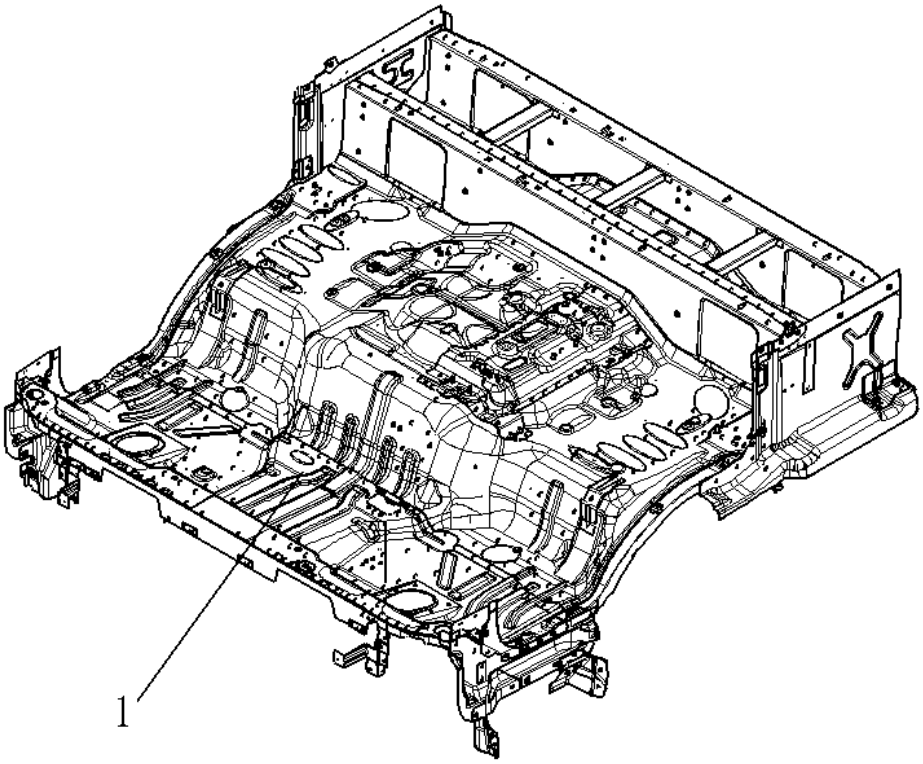

No.	Part No.	Part name	Qty.	Wearing Prt.	Remark
1	L9501012000	Floor assy.	1		

Side shield welding pieces

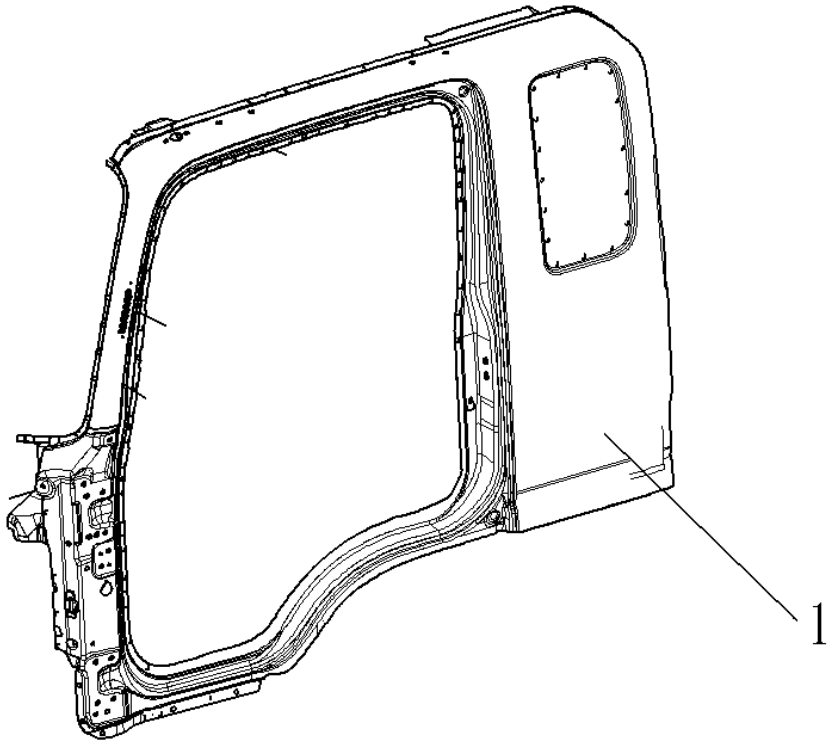

No.	Part No.	Part name	Qty.	Wearing Prt.	Remark
1	L9501035000	L. side shield assy.	1		
	L9501036000	R. side shield assy.	1		

Door welding pieces

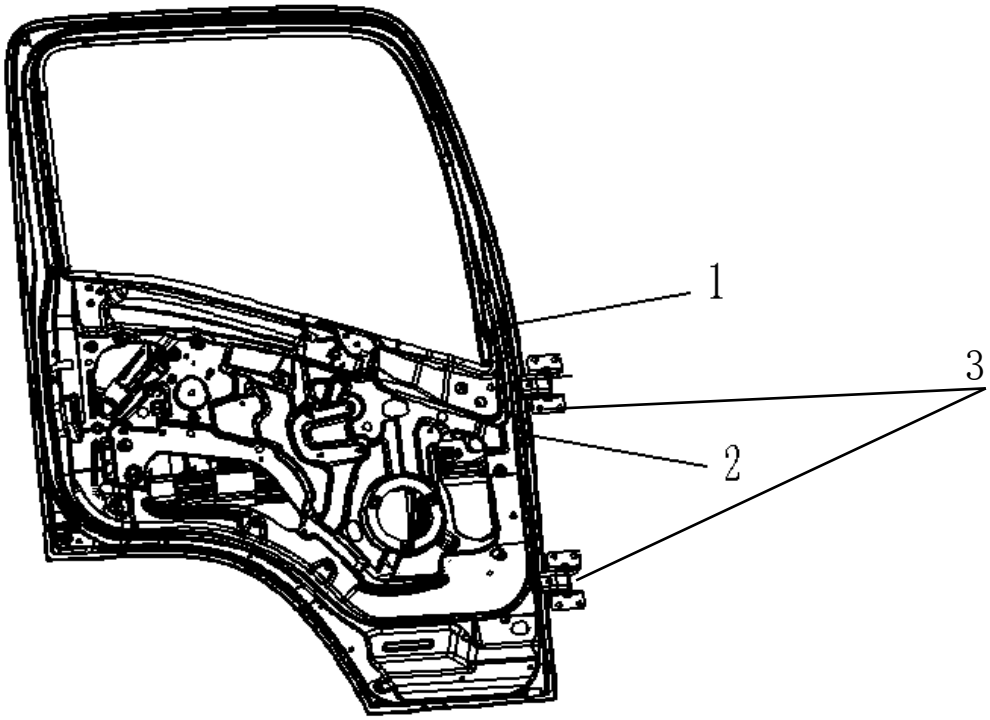

No.	Part No.	Part name	Qty.	Wearing Prt.	Remark
1	L9501060200	R. door assy.	1		
	L9501060100	L. door assy.	1		
2	L9502990010	Door stopper assy.	2		
	Q3200820	Hexagon flange nut	4		
	Q174B0620	Cross recessed hexagon bolt	4		
	Q400B06	Small washer	4		
	Q40306	Spring washer	4		
3	L9501060090	Door hinge assy.	4		
	L9501060001	Door hinge child piece	4		
	L9501060002	Door hinge parental piece	4		
	L9501060003	Limiting plate, door hinge	4		
	L9501060004	Bolt, door hinge limiting plate	4		
	L9501060005	Rotating sleeve, door hinge	8		
	L9501060006	Rotating shaft, door hinge	4		

Roof welding pieces

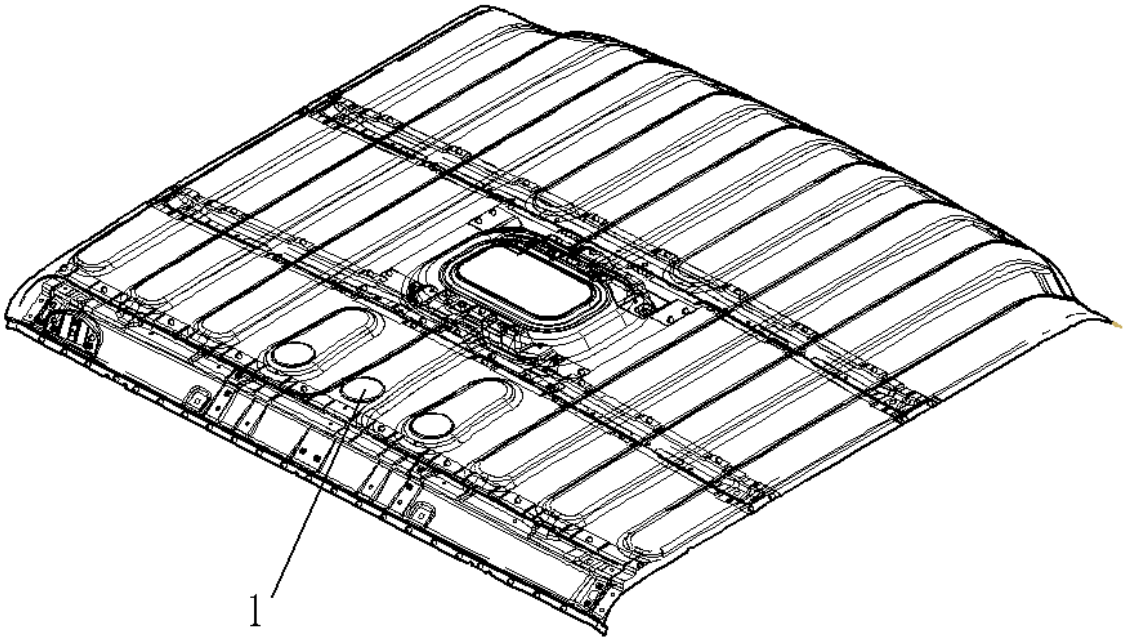

No.	Part No.	Part name	Qty.	Wearing Prt.	Remark
1	L9501052000	Roof assy.	1		

Rear shield welding pieces

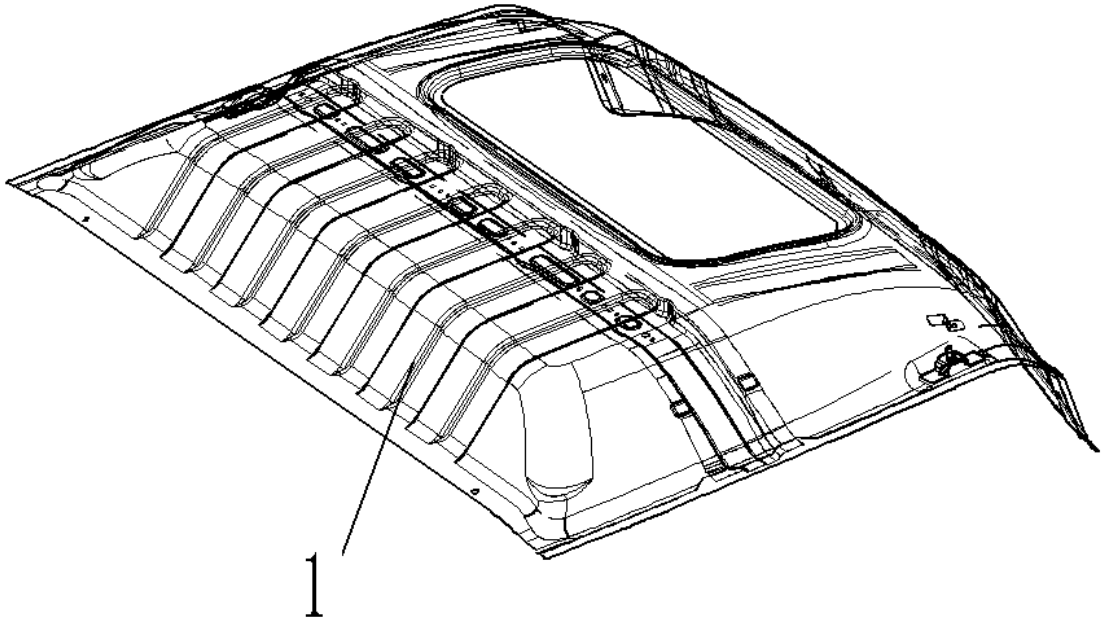

No.	Part No.	Part name	Qty.	Wearing Prt.	Remark
1	L9501040000	Rear shield assy.	1		

Bumper welding piece

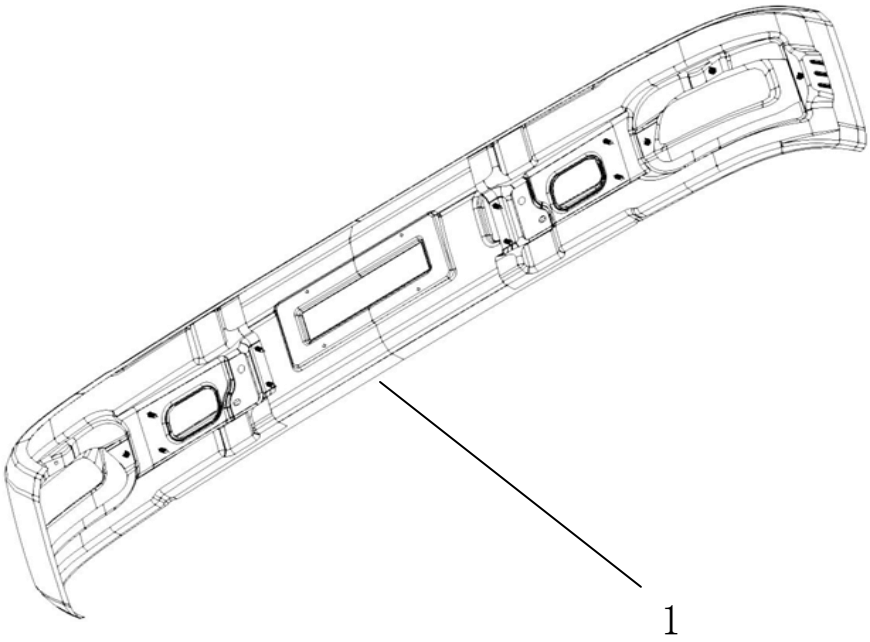

No.	Part No.	Part name	Qty.	Wearing Prt.	Remark
1	L9519010000	Bumper assy.	1		

Vehicle terminal assy.

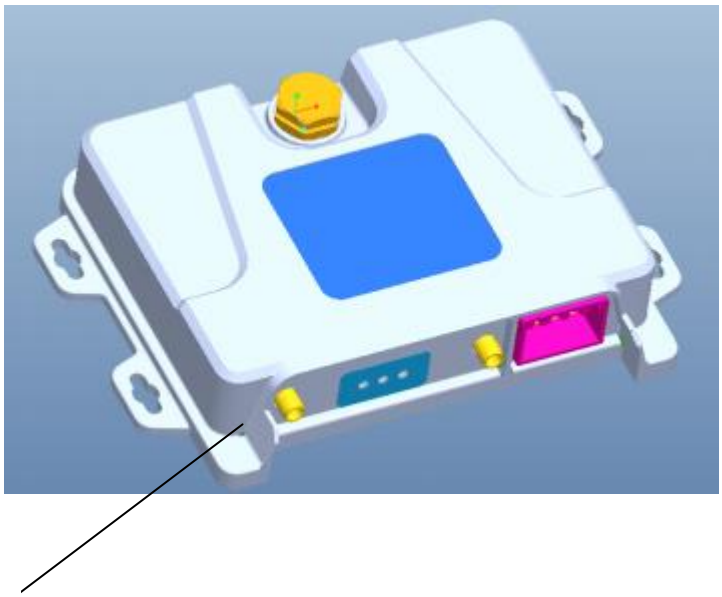

1

No.	Part No.	Part name	Qty.	Wearing Prt.	Remark
1	TK-VT600	Vehicle terminal assy.	1		

Bumper assy.

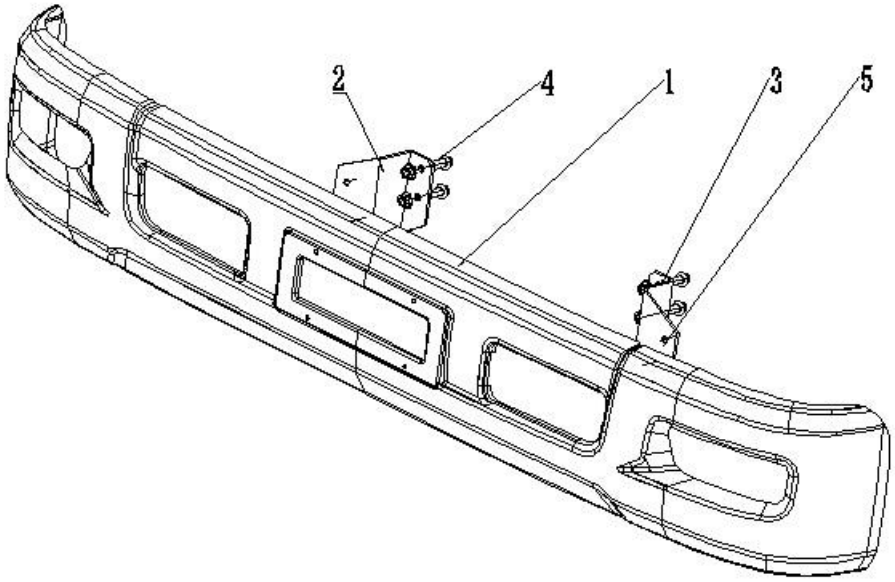

No.	Part No.	Part name	Qty.	Remark
1	L9519010000	Bumper assy.	1	
2	28F03-T3032-B	R. bumper bracket	1	
3	28F03-T3031-B	L. bumper bracket	1	
4	Q1841035	Bolt（bumper bracket and frame	4	
	Q32010	Nut（bumper bracket and frame）	4	
5	Q150B1040	Bolt(bumper and bumper bracket)	4	
	Q40310	Spring washer	4	
	Q40210	Plain washer	4	

Cabin tilting mechanism

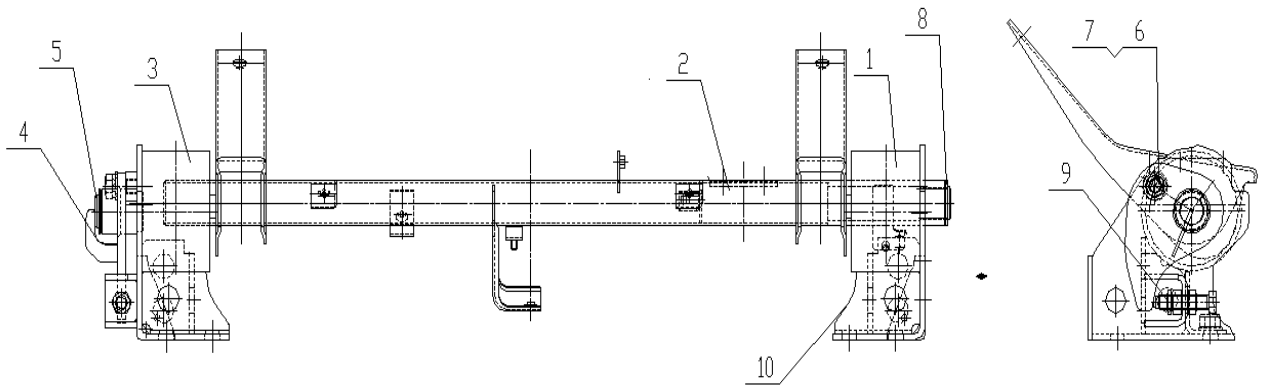

No.	Part No.	Part name	Qty.	Wearing Prt.	Remark
1	50F02-T3030	Front tilting mechanism assy.	1		
2	50F02-10-T3030	Shaft tube assy.	1		
3	50F02-30-T3030	R. seat assy.	1		
4	5002040LE010.1	Torsion bar assy.	1		
5	5002601LE010.1	Torsion bar	1		
6	Q1841430TF31	Fine thread bolt	1		
7	Q40114F31	Plain washer ring	1		
8	5002144E0-01	L. clip	1		
9	Q351B14	Hexagon thin nut	1		
10	50F02-20-T3030	L. seat assy.	1		

Cabin tilting mechanism

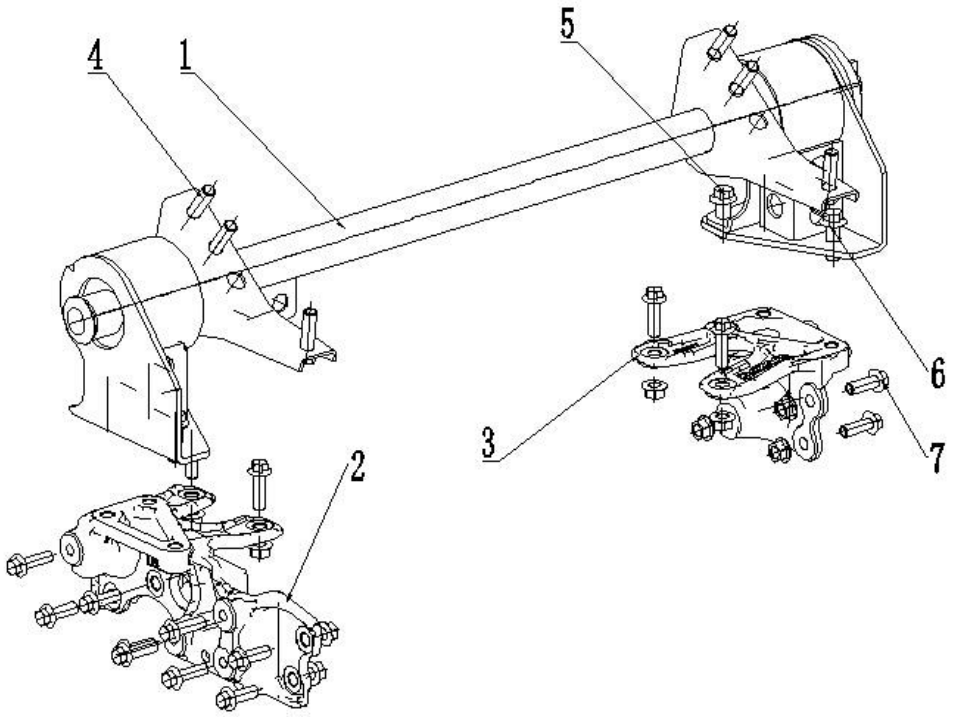

No.	Part No.	Part name	Qty.	Wearing Prt.	Remark
1	50F02-T3030	Single row cabin front suspension assy.	1		
2	5002511T3130	Steering motor bracket（L）	1		
3	5002512T3130	Steering motor bracket（R）	1		
4	Q1851445-0ZD	Flange bolt	6		
5	Q1841445	Flange bolt	4		
6	Q1841440	Flange bolt	2		
7	Q1841245	Flange bolt	13		
	Q32012	Flange nut	9		

Cabin rear support assy.

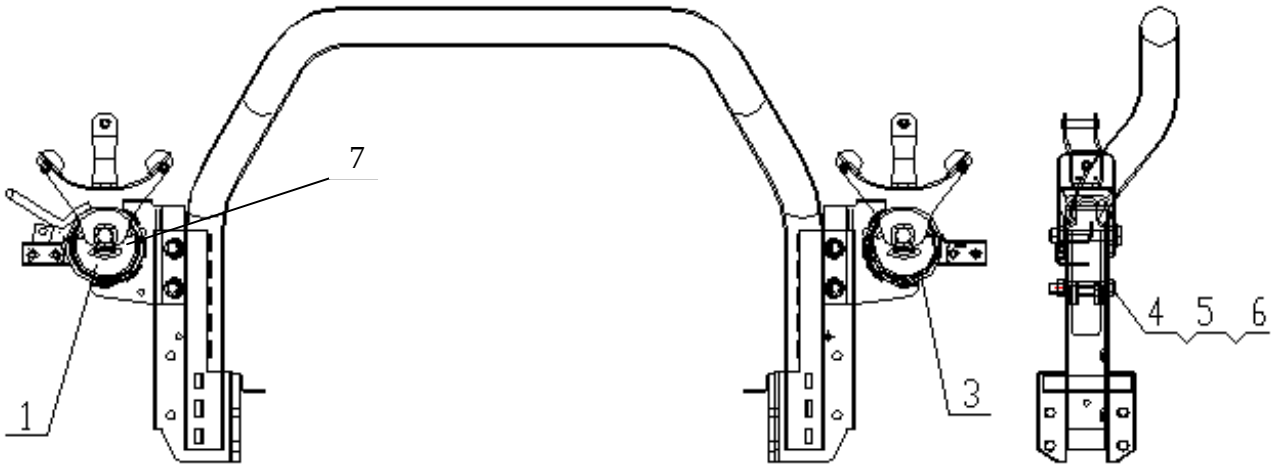

No.	Part No.	Part name	Qty.	Wearing Prt.	Remark
1	50F16-T3A140	Rear support assy.	1		
2	50F16-10-T3A140	Welding pipe assy. Rear support	1		
3	50F16-30-T3140	Bracket assy. Cabin rear support（R）	1		
4	Q151B1490	Bolt, rear support	4		
5	Q341B14	Hexagon nut	4		
6	Q40314	Spring washer	4		
7	50F16-20-T3140	Bracket assy. Cabin rear support（L）	1		

Cabin rear support assy.

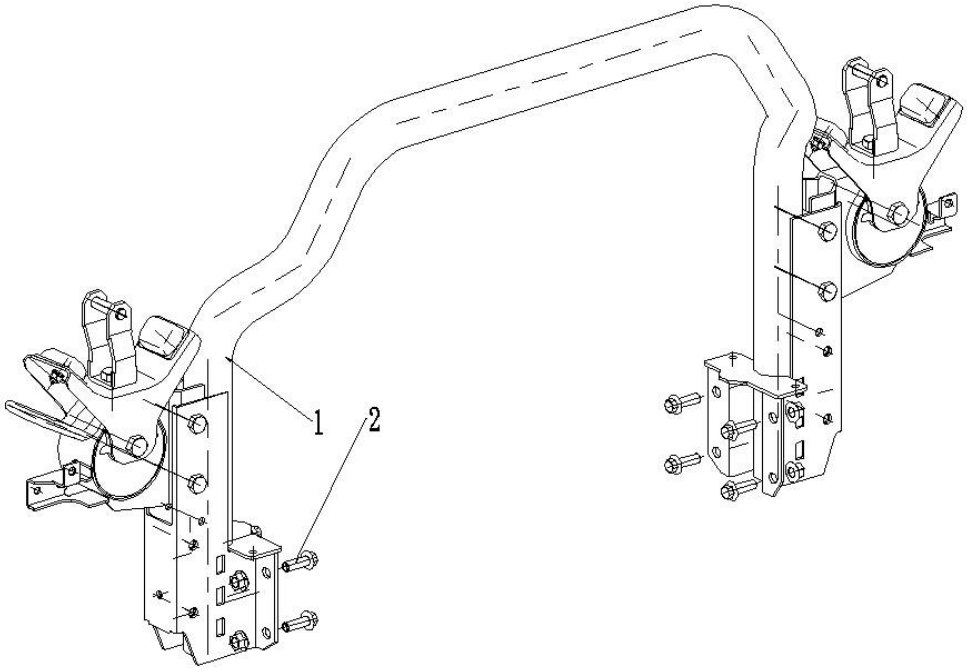

No.	Part No.	Part name	Qty.	Wearing Prt.	Remark
1	50F16-T3130	Cabin rear support assy.	1		
2	Q1841240	Flange bolt	8		
	Q32012	Flange nut	8		

Fr. Mudguard assy. Cabin (L)

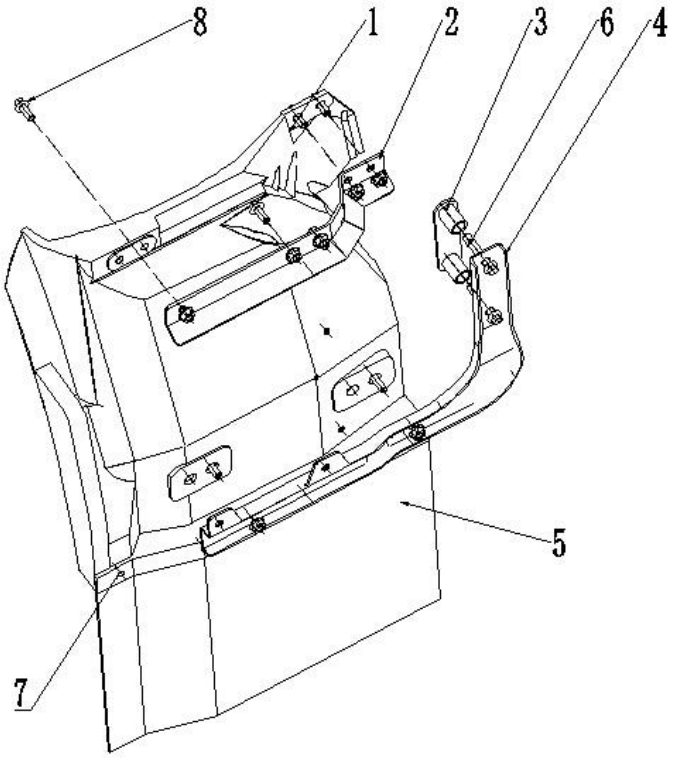

No.	Part No.	Part name	Qty.	Wearing Prt.	Remark
1	84FT3-03100	L. Fr. mudguard	1		
2	84FT3-03510	Upper press strip, L. mudguard	1		
3	84FT3-03340	Support plate, mudguard	1		
4	84FT3-03320	Lower press strip, L. mudguard	1		
5	84FT3-03710	L. mudguard flap assy.（with press strip）	1		
6	Q1841050	Flange bolt	2		
7	Q1840620	Flange bolt	4		
	Q32006	Flange nut	4		
	Q40206	Big washer	4		
8	Q1840820	Flange bolt	7		
	Q32008	Flange nut	2		
	Q40208	Big washer	2		

Fr. Mudguard assy. Cabin (R)

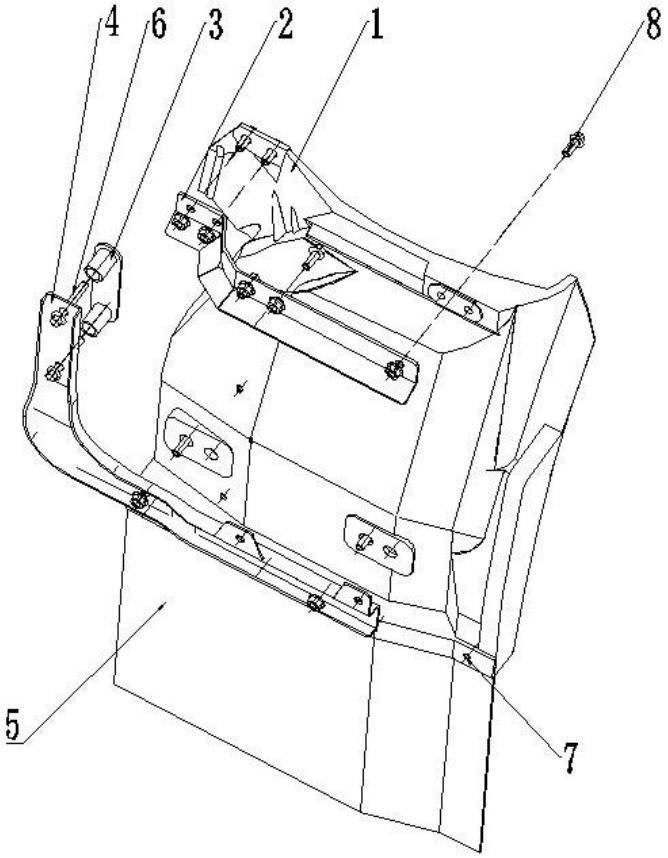

No.	Part No.	Part name	Qty.	Wearing Prt.	Remark
1	84FT3-03200	R. Fr. mudguard	1		
2	84FT3-03610	Upper press strip, R. mudguard	1		
3	84FT3-03340	Support plate, mudguard	2		
4	84FT3-03330	Lower press strip, R. mudguard	1		
5	84FT3-03720	R. mudguard flap assy.（with press strip）	1		
6	Q1841050	Flange bolt	2		
7	Q1840620	Flange bolt	4		
	Q32006	Flange nut	4		
	Q40206	Big washer	4		
	Q1840820	Flange bolt	7		
	Q32008	Flange nut	2		
	Q40208	Big washer	2		

Battery wiring assy.

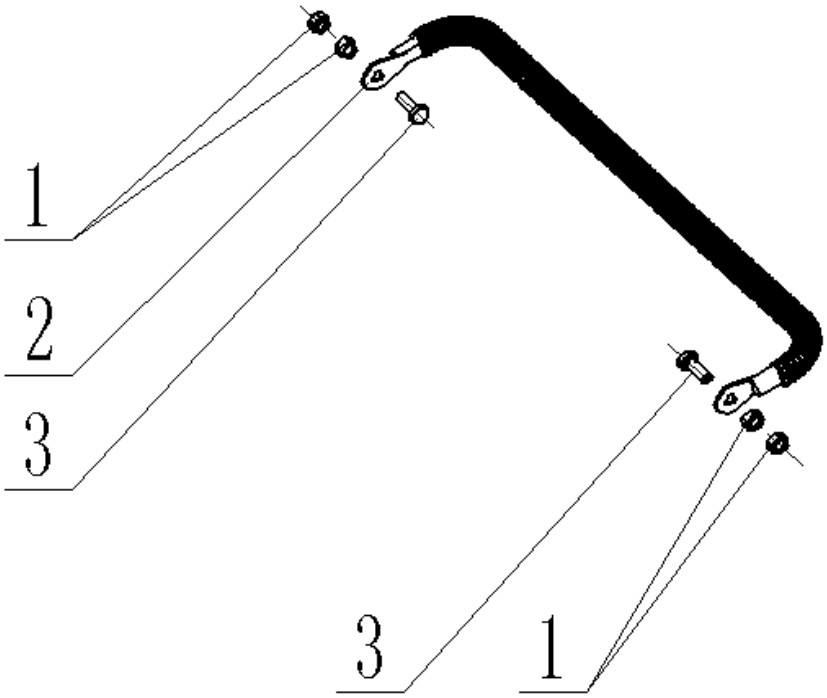

No.	Part No.	Part name	Qty.	Wearing Prt.	Remark
1	Q340B08	1-type hexagon nut	4		
2	37DDC-24160	Battery wiring	1		
3	Q150B0825	Hexagon bolt	2		

Battery positive wiring

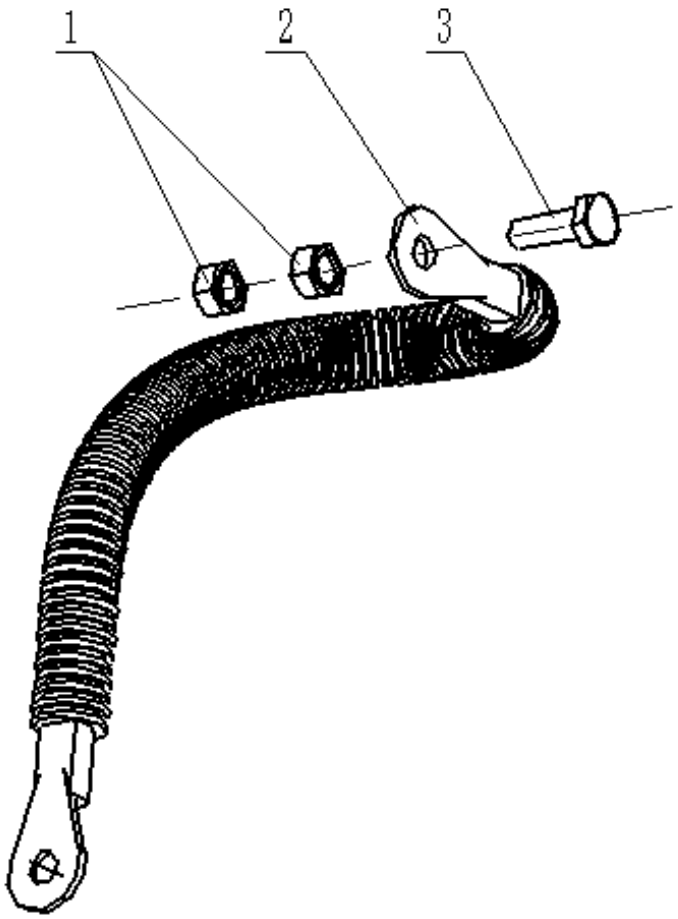

No.	Part No.	Part name	Qty.	Wearing Prt.	Remark
1	Q340B08	1-type hexagon nut	2		
2	37DDC-24140-050	Battery positive wire	1		
3	Q150B0825	Hexagon bolt	1		

Battery negative wiring

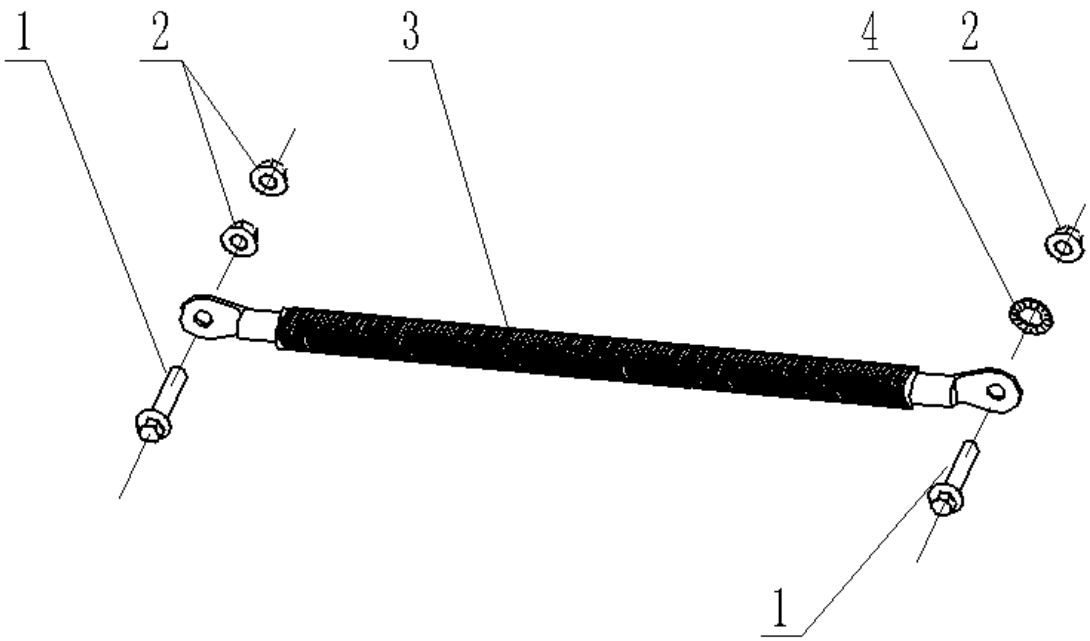

No.	Part No.	Part name	Qty.	Wearing Prt.	Remark
1	Q150B0840	Hexagon bolt	2		
2	Q340B08	1-type hexagon nut	3		
3	37DDC-24150-060	Battery negative wire	1		
4	Q41212	Serrated lock washer with external teeth	1		

Reverse buzzer

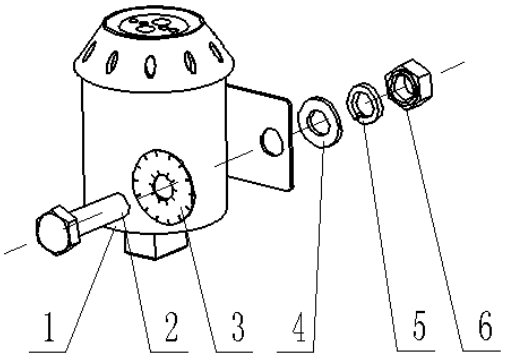

No.	Part No.	Part name	Qty.	Remark
1	38C3A1-18010	Reversing buzzer	1	
2	Q150B0830	Hexagon bolt	1	
3	Q41108	Serrated lock washer with internal and external teeth	1	
4	Q401B08	Plain washer	1	
5	Q403B08	Spring washer	1	
6	Q340B08	1-type hexagon nut	1	

Chassis ground wiring

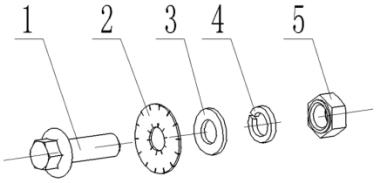

No.	Part No.	Part name	Qty.	Remark
1	Q150B0825	Hexagon bolt	1	
2	Q41108	Serrated lock washer with internal and external teeth	1	
3	Q401B08	Plain washer	1	
4	Q403B08	Spring washer	1	
5	Q340B08	1-type hexagon nut	1	

Electric horn

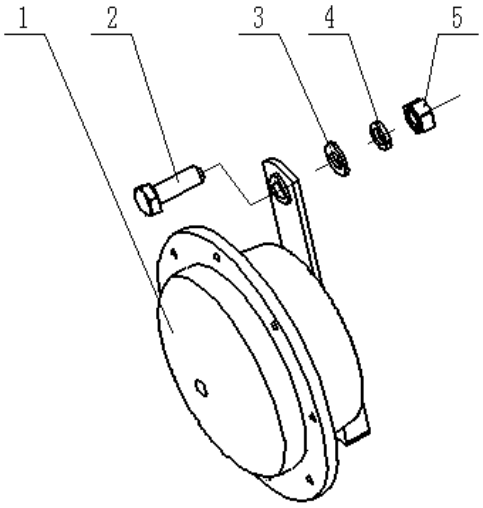

No.	Part No.	Part name	Qty.	Remark
1	37D84-21010	Electric horn assy.（Loud，24V）	1	
	37D84-21020	Electric horn assy.（Low，24V）	1	
2	Q150B0825	Hexagon bolt	1	
3	Q401B08	Plain washer	1	
4	Q403B08	Spring washer	1	
5	Q340B08	1-type hexagon nut	1	

L. Rr. Combination lamp assy.

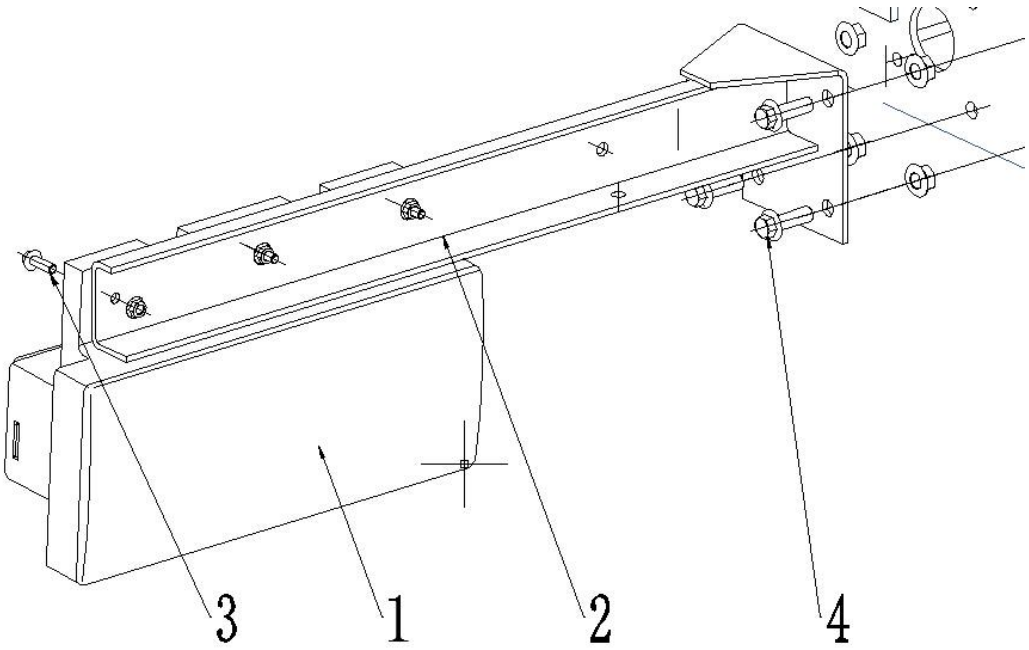

No.	Part No.	Part name	Qty.	Remark
1	37Q75-73010-A2	L. Rr. Combination lamp	1	
2	37FT3-17101-A	Bracket, L. Rr. Combination lamp	1	
3	Q150B0635	Bolt	3	
	Q340B06	Nut	3	
	Q40106	Plain washer	3	
	Q40306	Spring washer	3	
4	Q1841030	Flange bolt	4	
	Q32010	Flange nut	4	

R. Rr. Combination lamp assy.

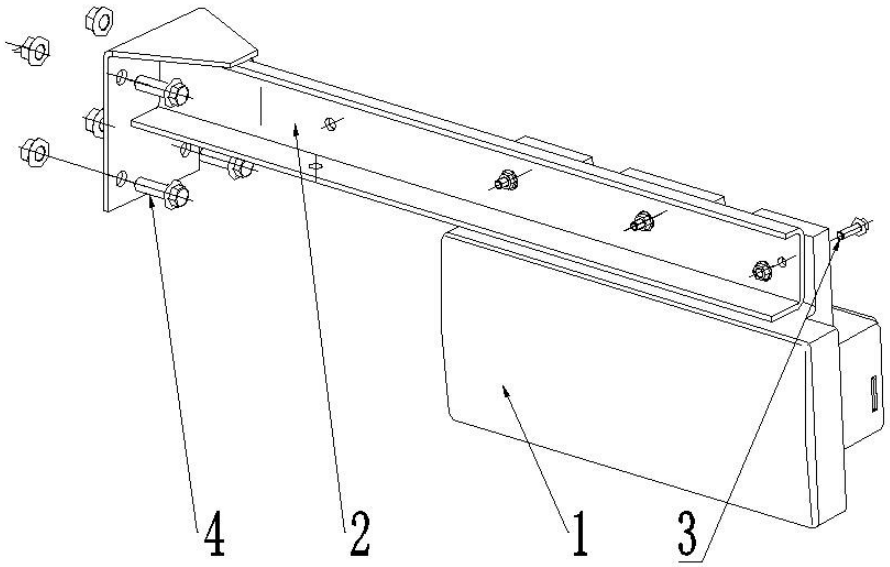

No.	Part No.	Part name	Qty.	Remark
1	37Q75-73020-A2	R. Rr. Combination lamp	1	
2	37FT3-17102-A	Bracket, R. Rr. Combination lamp	1	
3	Q150B0635	Bolt	3	
	Q340B06	Nut	3	
	Q40106	Plain washer	3	
	Q40306	Spring washer	3	
4	Q1841030	Flange bolt	4	
	Q32010	Flange nut	4	

DCDC positive wire

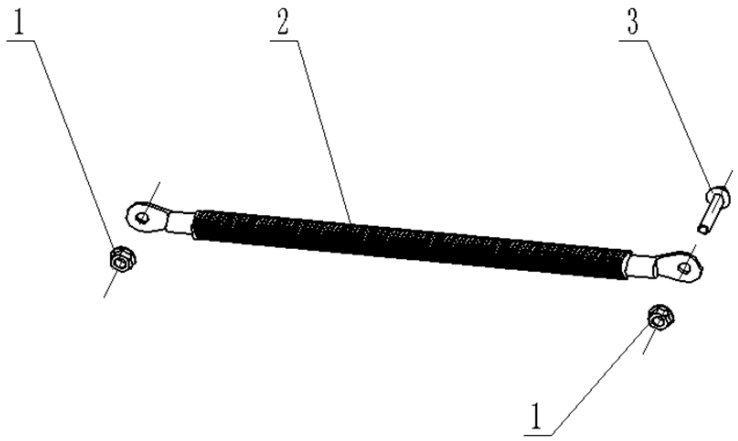

No.	Part No.	Part name	Qty.	Remark
1	Q32008	Hexagon flange nut	1	
2	37FST-24070G-D16	DCDC positive wire	1	
3	Q1840840	Hexagon flange bolt	1	

DCDC negative wire

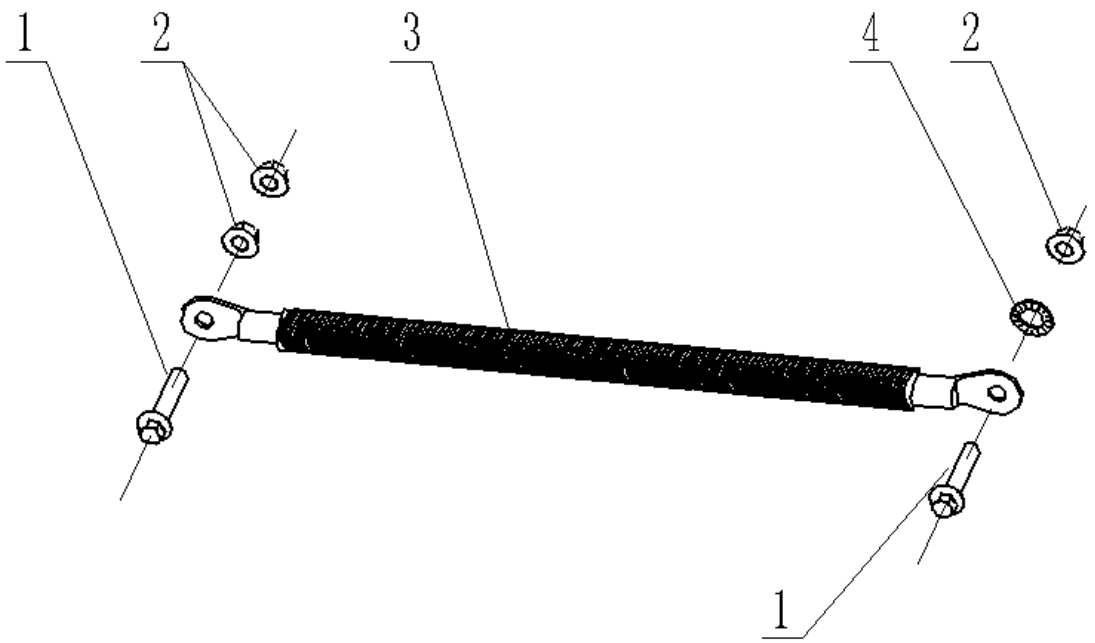

No.	Part No.	Part name	Qty.	Remark
1	Q150B0840	Hexagon bolt	2	
2	Q340B08	1-type hexagon nut	3	
3	37FST-24070G-D17	DCDC negative wire	1	
4	Q41212	Serrated lock washer with external teeth	1	

License plate lamp

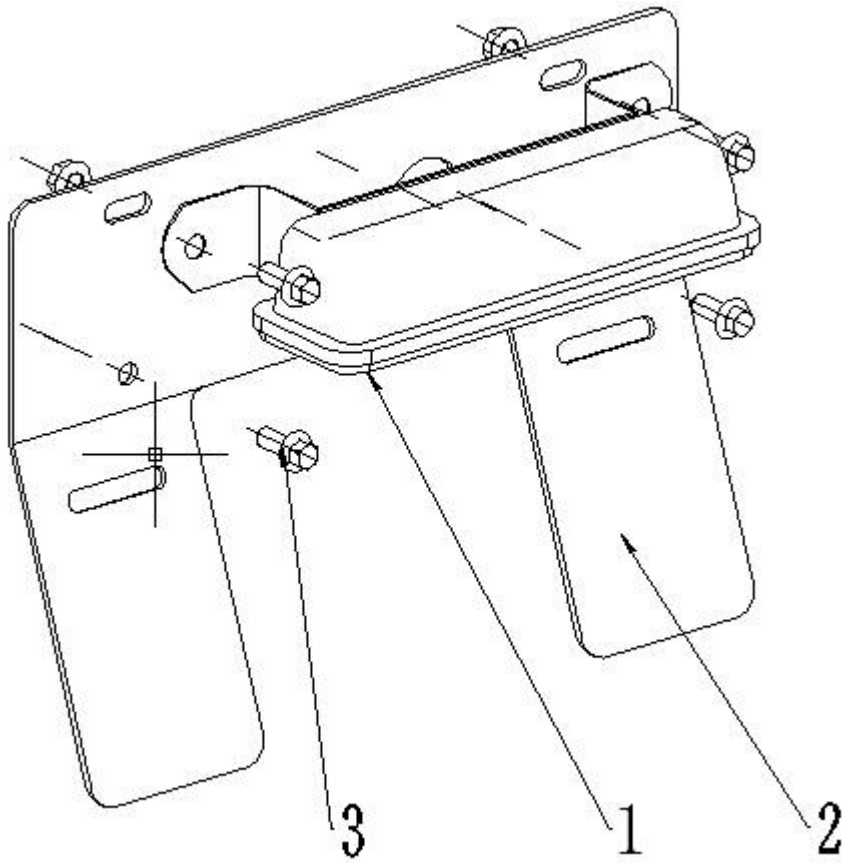

No.	Part No.	Part name	Qty.	Remark
1	37N-17010-B	License plate lamp	1	
2	37FT3-17201-B	License plate	1	
3	Q1840830	Flange bolt	4	
	Q32008	Flange nut	4	

Clock spring

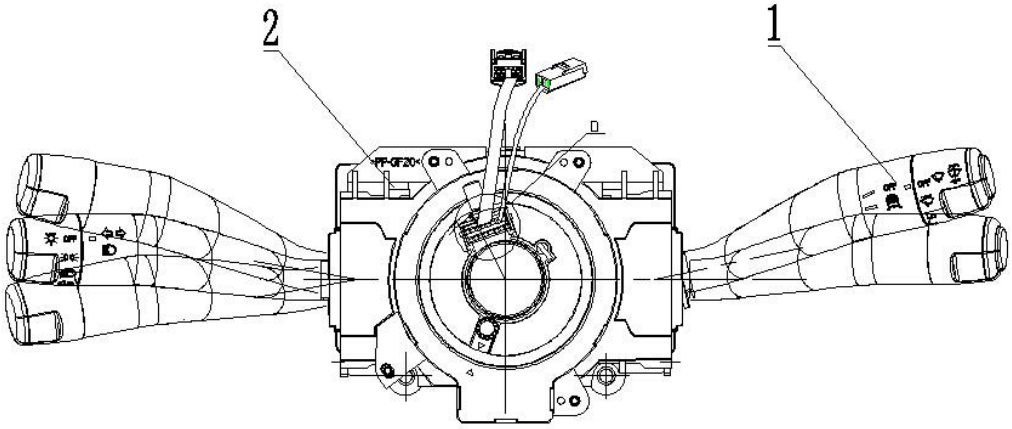

No.	Part No.	Part name	Qty.	Remark
1	34FT3-02010D-S1-01	Combination switch	1	
2	34FT3-02010D-S10-022	Clock spring	1	

Chassis wiring harness

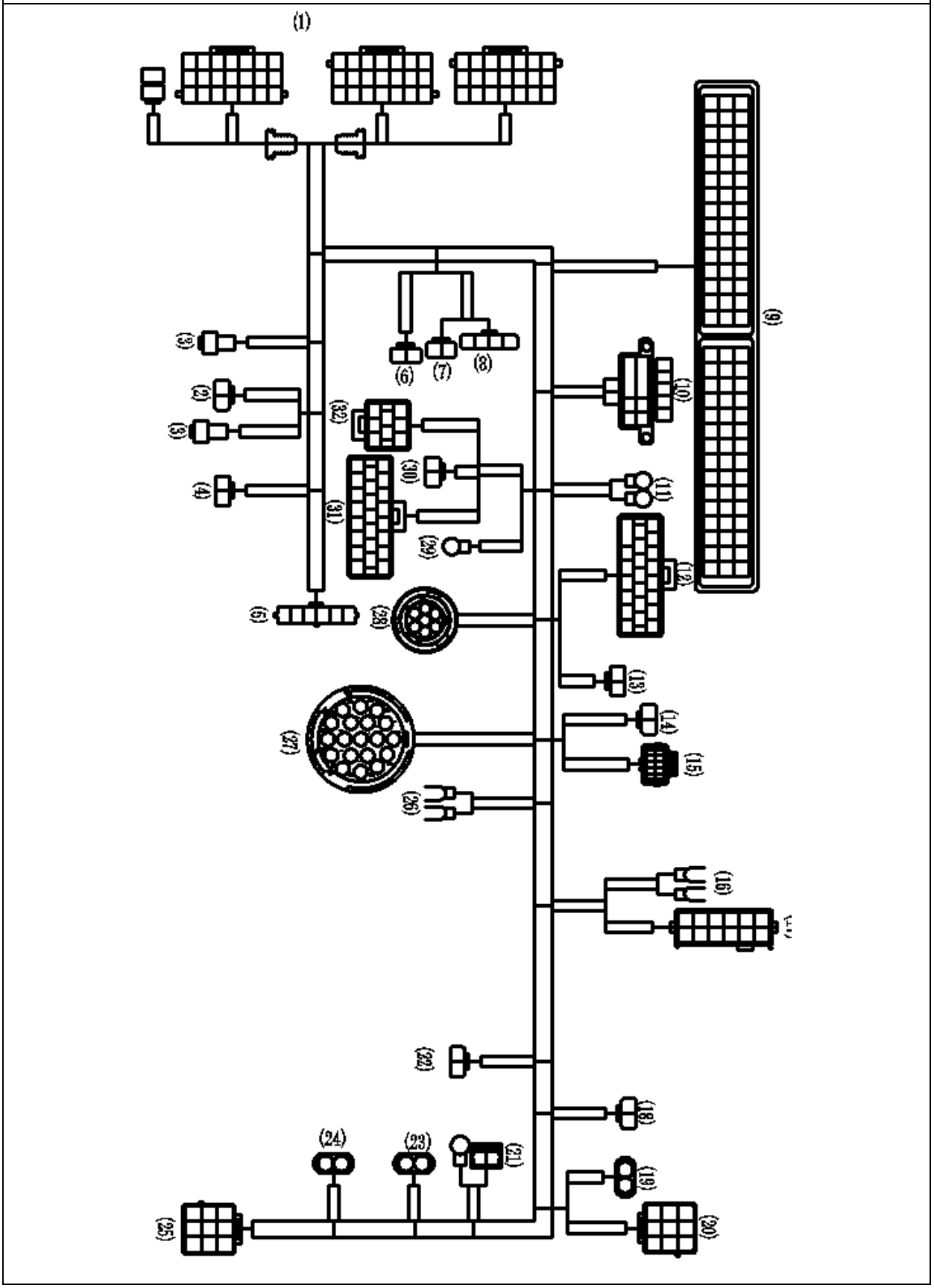

Chassis wiring harness					
No.	Part No.	Part name	Qty.	Wearing Prt.	Remark
1	37***4.5-24570T3-AB	Chassis main harness	1		
		（1）-connect cabin harness			
		（2）-connect PTC signal			
		（3）-connect electric horn			
		（4）-connect air conditioner pressure switch wire			
		（5）-connect air condition compressor signal			
		（6）-connect water pump motor			
		（7）-connect fan power supply			
		（8）-connect fan signal			
		（9）-connect VCU			
		（10）-connect main fuse			
		（11）-connect power switch			
		（12）-connect controller			
		（13）-connect controller CAN			
		（14）-connect slow charging			
		（15）-connect fast charging socket signal			
		（16）-connect air pressure sensor			
		（17）-connect motor signal			
		（18）-connect temp. switch of air pump			
		（19）-connect L. marker lamp			
		（20）-connect L. tail lamp			
		（21）-connect reversing alarm			
		（22）-connect dryer			
		（23）-connect license plate lamp			
		（24）-connect R. marker lamp			
		（25）-connect R. tail lamp			
		（26）-connect air pressure sensor			
		（27）-connect battery signal			

ABS wiring harness					
		（28）-connect S-box signal			
		（29）-connect ground wire			
		（30）-connect vehicle CAN			
		（31）-connect S-box control unit			
		（32）-connect S-box temp. sensor			

(1)
(2)
(3)
(4)
(5)
(6)
(7)
(8)
(9)
(10)

ABS wiring harness					
No.	Part No.	Part name	Qty.	Wearing Prt.	Remark
1	37DDC-24570T3-ABS(3.3)	ABS wiring harness	1		
		（1）-connect ABS cabin control wire			
		（2）-connect ground wire			
		（3）-connect L. fr. wheel electromagnetic valve			
		（4）-connect R. fr. wheel electromagnetic valve			
		（5）-connect L. fr. wheel sensor			
		（6）-connect R. fr. wheel sensor			
		（7）-connect R. Rr. Wheel electromagnetic valve			
		（8）-connect R. Rr. Wheel sensor			
		（9）-connect L. Rr. Wheel electromagnetic valve			
		（10）-connect L. Rr. Wheel sensor			

Front suspension system

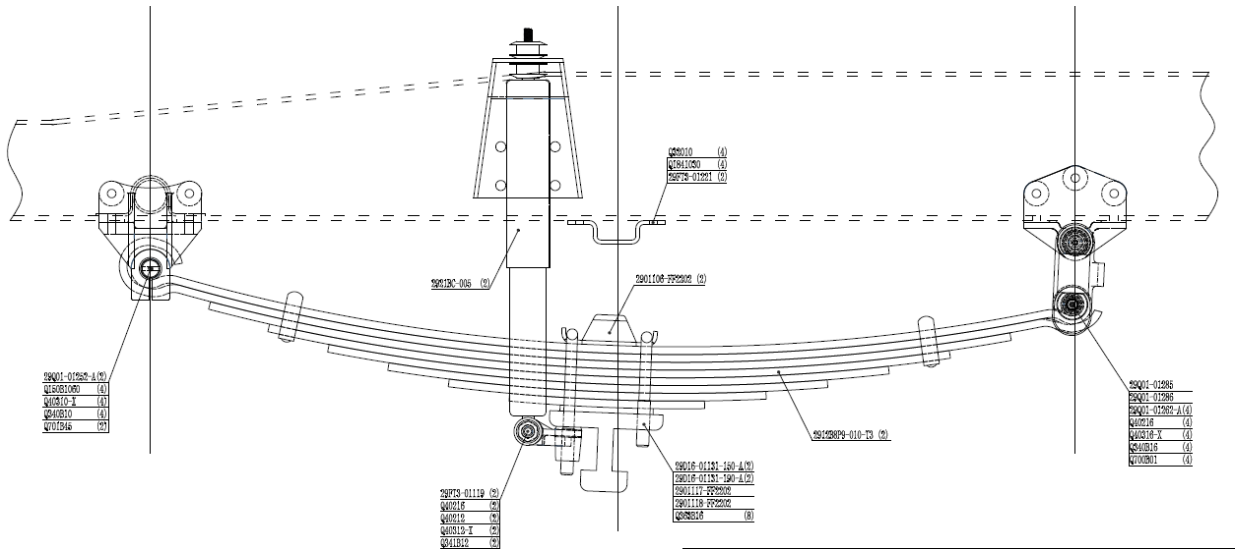

No.	Part No.	Part name	Qty.	Remark
1	2912B8P9-010-T3	Front leaf spring assy	2	
2	2901106-FF2202	Cover plate assy. Front leaf spring	2	
3	29D16-01131-150-A	U-bolt	2	
4	29D16-01131-190-A	U-bolt	2	
5	2901117-FF2202	Lower bracket, shock absorber	1	
6	2901118-FF2202	Lower bracket, shock absorber	1	
7	Q363B16	Thick nut	8	
8	29Q01-01252-A	Pin, lifting eye	2	
9	Q150B1060	Hexagon bolt	4	
10	Q40310-X	Spring washer	4	
11	Q340B10	Hexagon nut	4	
12	Q701B45	Elbow grease mouth	2	
13	29Q01-01285	Front lifting eye	1	

14	29Q01-01286	Front lifting eye	1	
15	29Q01-01262-A	Pin, lifting eye	4	
16	Q40216	Plain washer	4	
17	Q40316-X	Spring washer	4	
18	Q340B16	Hexagon nut	4	
19	Q700B01	Straight grease mouth	4	
20	2921BC-005	Shock absorber assy.	2	
21	29FT3-01119	Lower pin, shock absorber	2	
22	Q40216	Plain washer	2	
23	Q40212	Plain washer	2	
24	Q40312-X	Spring washer	2	
25	Q341B12	Hexagon nut	2	
26	29FT3-01221	Check plate, damping block	2	
27	Q1841030	Hexagon flange bolt	4	
28	Q32010	Hexagon flange bolt	4	

Front axle and steering knuckle

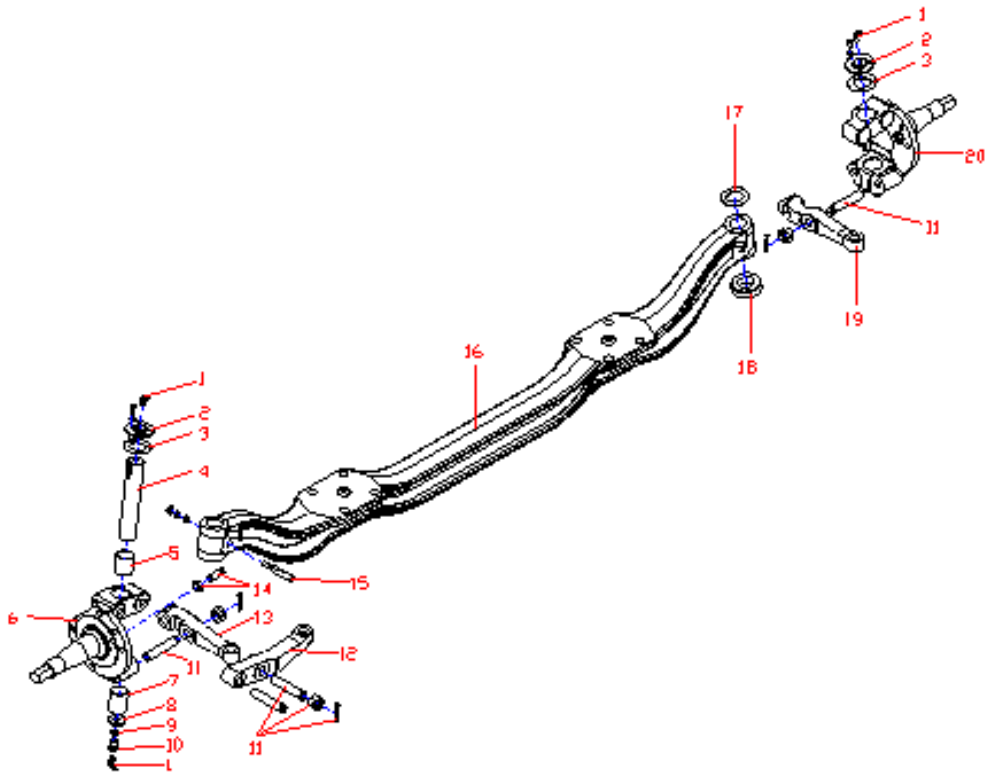

No.	Part No.	Part name	Qty.	Remark
1	Q701B70	Elbow grease mouth	4	
2	30Q02-01033	Upper cover, steering knuckle	2	
	Q40306	Spring washer	6	
	Q150B0616	Bolt	6	
3	30Q02-01034	Gasket	2	
4	30Q02-01021-B	King pin	2	
5	30Q02-01019	Upper bushing	2	
6	30.61S-01017	L. steering knuckle	1	
7	30Q02-01019	Upper bushing	2	
8	30Q02-01037	King pin plug assy.	2	
9	35N-06039	Washer	2	
10	30Q02-01039-B	King pin plug screw	2	
11	30Q02-01048	Bolt, knuckle arm	6	
	30Q02-01049	Hexagon grooved flat nut	6	
	Q5004036	Cotter pin	6	
12	30.61G21S-01044	Steering longitudinal rod arm	1	
13	30Q02-01041-A	L. knuckle arm	1	
14	30Q02-01032	Steering limit bolt	2	
	Q341B14	I-type hexagon nut	2	

15	30Q02-01031	Wedge-shaped lock pin	2	
	Q40310	Spring washer	2	
	Q341B10	I-type hexagon nut	2	
	Q40110	Spring washer	2	
16	30Q57-01011	Front axle	1	
17	30Q02-01022～01029	Adjustment washer, steering knuckle	As needed	
18	30Q02-Z98906K	Thrust bearing assy.	2	
19	30Q02-01042-A	R. knuckle arm	1	
20	30.61S-01018	R. steering knuckle	1	

Tie rod assy.

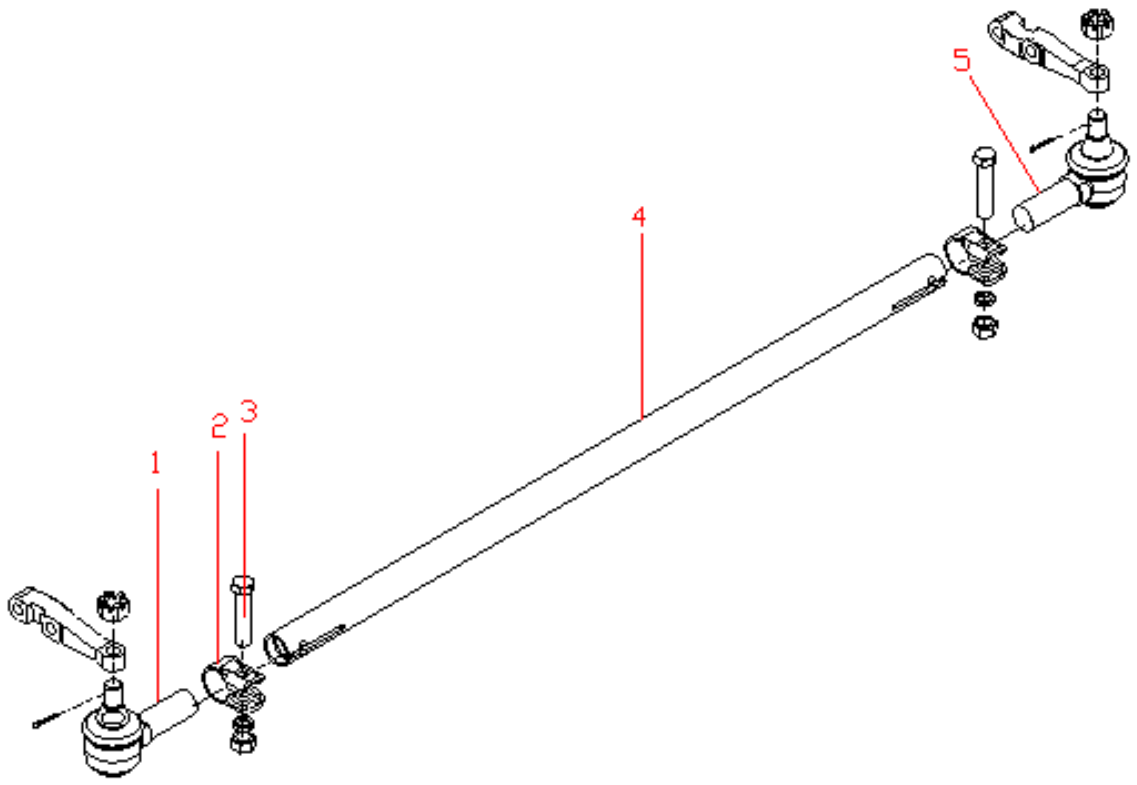

No.	Part No.	Part name	Qty.	Remark
1	3303QSM-059	L. joint assy.	1	
	Q387B16	Hexagon grooved flat nut	2	
	Q5004036	Cotter pin	2	
2	33Q02-03054	Clamp	2	
3	Q341B14	I-type hexagon nut	2	
	Q151B1460	Hexagon bolt	2	
	Q40414	Spring washer	2	
4	33Q57-03052	Tie rod	1	
5	3303QSM-060	R. joint assy.	1	

Fr. wheel hub and brake drum

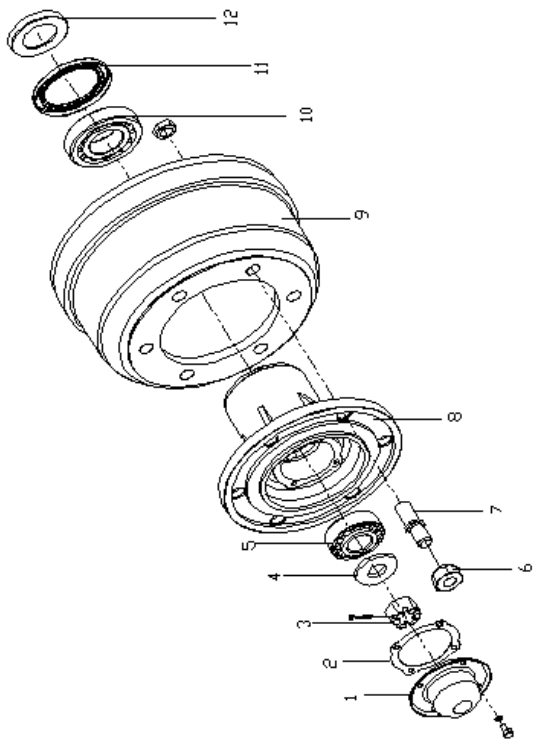

No.	Part No.	Part name	Qty.	Remark
1	31Q02-03061	Cover, front wheel hub	2	
	Q150B0814	Bolt	8	
	Q40308	Spring washer	8	
2	31Q02-03062	Gasket, front wheel hub cover	2	
3	30Q02-01061	Nut, steering knuckle	2	
	Q5005045	Cotter pin	2	
4	30Q02-01058	Baffle plate, steering knuckle	2	
5	32306	Bearing	2	
6	31.91G135-03055	Nut, wheel	12	
7	31.61G21AS-03052	Bolt, wheel	12	
	31Q02-04057	Nut, brake drum	12	
8	31.61G21AS-03015	Fr. wheel hub	2	
9	35.61G101-01075	Fr. brake drum	2	
10	33209	Inner bearing assy. Front wheel hub	2	
11	31Q02-03080-A	Oil seal assy. Front wheel hub	2	
12	31Q02-03080-A	Oil seal assy.	2	

Fr. wheel brake

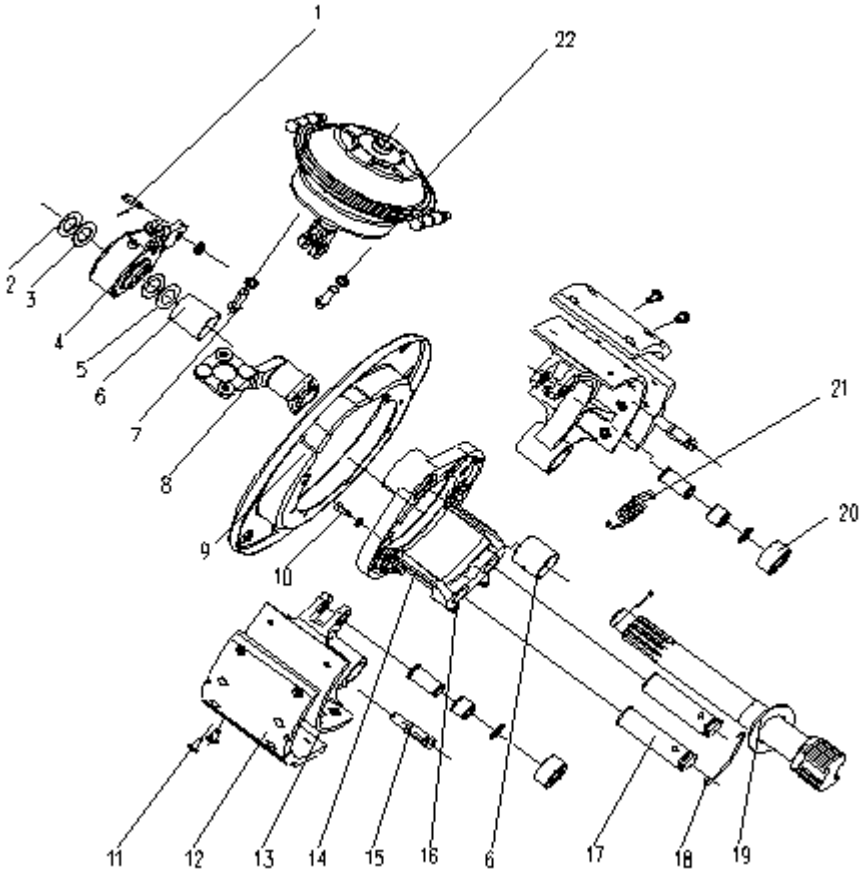

No.	Part No.	Part name	Qty.	Remark
	3501.31G79S-010	Fr. L. brake assy.	1	
	3501.31G79S-020	Fr. R. brake assy.	1	
1	Q5101240	Pin	2	
	Q40112	Washer	2	
	Q5006345	Cotter pin	2	
2	3501C-046	Adjustment washer	2	
3	35D-02047	Adjustment washer	As needed	
4	3501D-050-A	Front adjustment arm assy.	2	
5	35E-01034	O-ring	4	
	3501C-044	Adjustment washer	2	
6	35.61QA-01039	Bush	2	
7	Q150B0610	Bracket bush, front air chamber	8	
	Q40306	Spring washer	8	
	Q700B01	Grease mouth	4	
8	3519.32G32-031	Bracket, Fr. L. air chamber	1	
	3519.32G32-041	Bracket, Fr. R. air	1	

		chamber		
9	3501.31G71-011	Fr. dust-proof cover	2	
	35Q68-01038	Rubber plug	8	
10	Q150B0610	Hexagon bolt	14	
	Q40306	Spring washer	14	
11	3501.80G-082	Rivet	48	
12	3501.31B-081	Brake shoe lining	8	
13	3501.31G71-085	Fr. brake shoe	4	
14	3501.61S-026	Fr. L. brake bottom plate	1	
	3501.61S-027	Fr. R. brake bottom plate	1	
15	3501.61G-108	Spring pin	2	
	Q341B10	Nut	2	
16	3501.80Q2-134	Screw, brake shoe lining	4	
17	3501Q54-052	Pin, brake shoe	2	
	3501Q54-093	Pin bush, brake shoe	2	
18	Q50512200	Steel wire	2	
19	3501.31G5-041A	Cam, Fr. L. brake	1	
	3501.31G5-042A	Cam, Fr. R. brake	1	
	Q5006345	Cotter pin	2	
20	3501.80GB-111	Trolley	2	
	3501.80G-109	Trolley shaft, brake shoe	2	
21	3501.61G-095	Return spring	2	
22	3519G-020	Air chamber assy. L. brake	1	
	3519G1-020	Air chamber assy. R. brake	1	
	Q5004025	Cotter pin	2	
	Q150B1235	Bolt	4	
	Q40312	Adjustment washer	4	

Rear suspension system

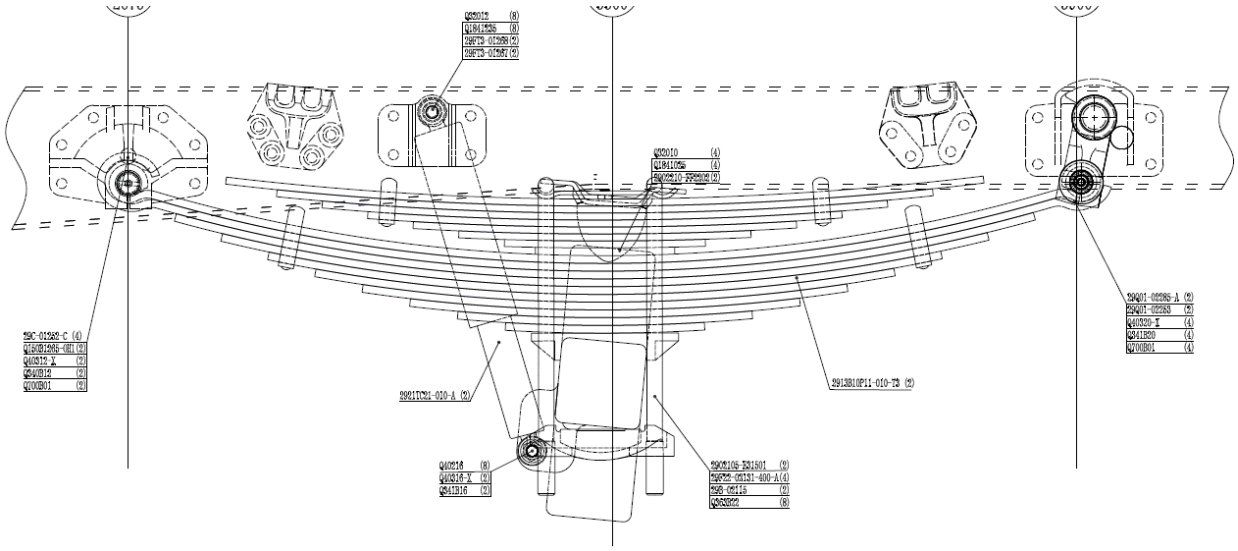

No.	Part No.	Part name	Qty.	Remark
1	2913B10P11-010-T3	Rear leaf spring assy.	2	
2	2902105-E31501	Cover plate, rear leaf spring	2	
3	29F22-02131-390-A	U-bolt	4	
4	29B-02115	Bottom plate, U-bolt	2	
5	Q363B22	Thick nut	8	
6	29C-01252-C	Front pin, leaf spring	4	
7	Q150B1265-0H1	Hexagon bolt	2	
8	Q40312-X	Spring washer	2	
9	Q340B12	Hexagon nut	2	
10	Q700B01	Straight grease mouth	4	
11	29Q01-02285-A	Rear lifting eye assy.	2	
12	29Q01-02253	Pin, lifting eye	2	
13	Q40320-X	Spring washer	4	
14	Q341B20	Hexagon nut	4	
15	Q700B01	Straight grease mouth	4	

16	2921TC21-010-A	Shock absorber assy	2	
17	29FT3-01267	Upper bracket, shock absorber	2	
18	29FT3-01268	Reinforced plate, shock absorber	2	
19	Q1841235	Hexagon flange bolt	8	
20	Q32012	Hexagon flange nut	8	
21	Q40216	Plain washer	8	
22	Q40316-X	Spring washer	4	
23	Q341B16	Hexagon nut	4	
24	2902210-FF2202	Limiting block assy.	2	
25	Q1841025	Hexagon flange bolt	4	
26	Q32010	Hexagon flange nut	4	

Rear axle housing assy.

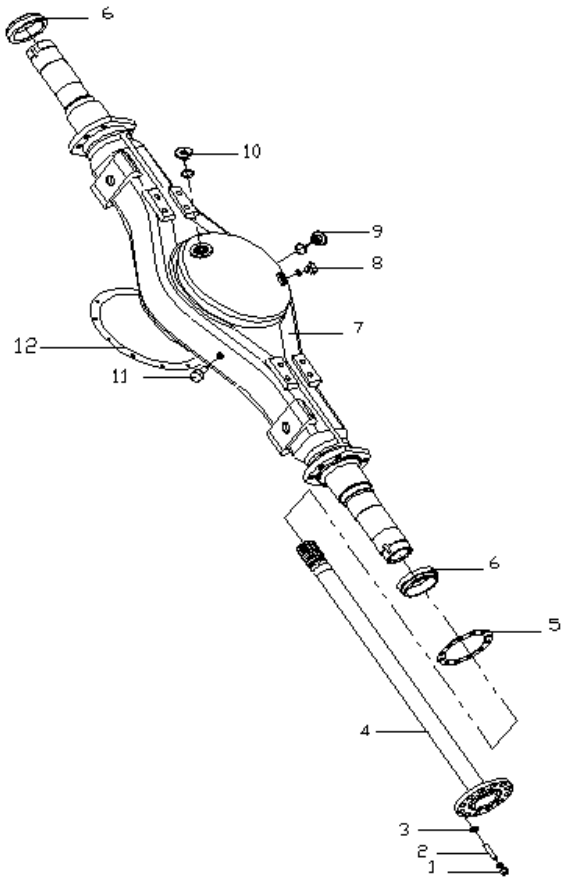

No.	Part No.	Part name	Qty.	Remark
1	Q341B12	I-type hexagon nut	16	
	Q40512	Heavy spring washer	16	
2	Q1211235	Stud	16	
3	24C-03069	Taper sleeve	16	
4	24Q-03065	Semi-shaft	2	
5	24Q-03064	Gasket	2	
6	2401Q-043	Inner oil seal ring, rear axle	2	
7	2401.61G171S-010	Rear axle housing assy. (includes item 6)	1	
8	2401Q-023B	Plug, oil level hole	1	
	Q734B1800265	O-ring	1	
9	2401Q-034B	Plug, oil-fill/release hole	1	
10	2401Q-034B	Plug, oil-fill/release hole	1	
	Q734B2240355	O-ring	2	
11	24Q-01068	Air plug assy.	1	
12	24C-01061	Gasket	1	

Main reducer and bevel gear differential assy.

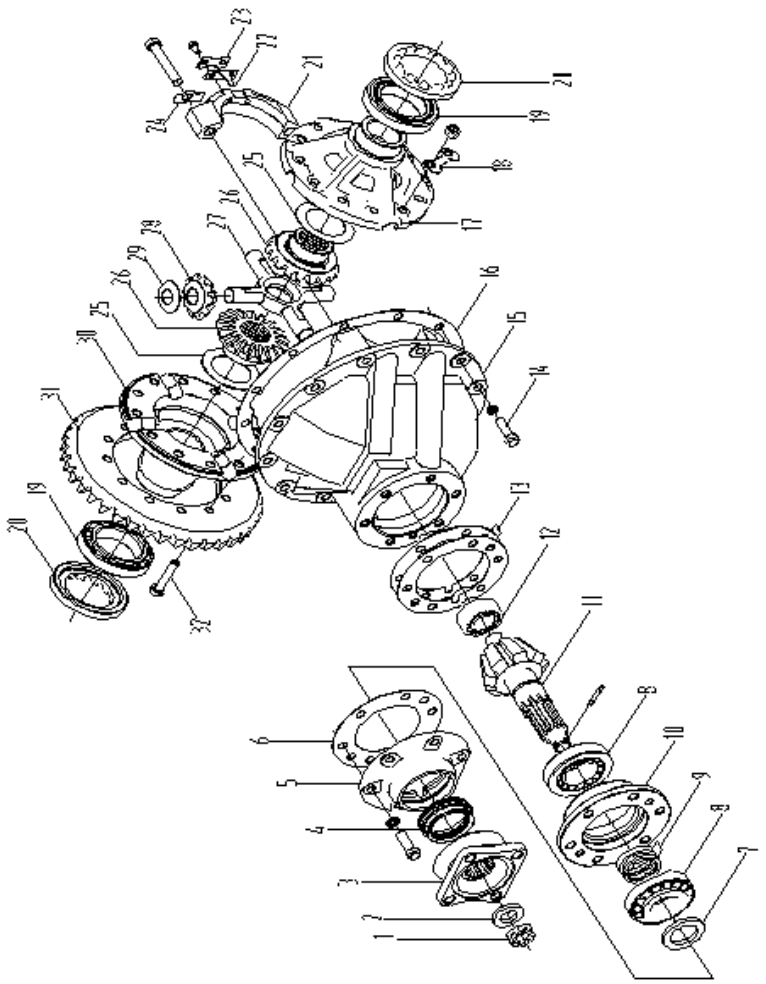

No.	Part No.	Part name	Qty.	Remark
	2402Q01-010-A	Main reducer assy. Rear axle	1	
1	2402C-072	Nut, driving bevel gear	1	
2	2402C-071	Washer	1	
3	2402Q01-065-A	Flange assy.	1	
4	2402Q01-060	Oil seal assy., reducer	1	
5	2402Q01-056	Oil seal seat	1	
	Q150B1240	Hexagon bolt	6	
	Q40312	Spring washer	6	
6	24C-01061	Gasket, oil seal seat	1	
7	2402C-052	Thrust washer	1	
8	30309X2B	Fr. bearing, driving bevel gear	2	
9	2402C-151～155	Adjustment washer	As needed	
	2402C-161～174	Adjustment washer	As needed	

10	2402C-036	Bearing seat	1	
11	2402Q01-025	Driving bevel gear, rear axle	1	
	2402.5T2-020	Driving bevel gear and bearing seat assy.	1	
12	C3G532605EK	Rear bearing assy.	1	
13	2402C-081	Adjustment washer	As needed	
	2402C-082	Adjustment washer	As needed	
	2402C-083	Adjustment washer	As needed	
	2402C-084	Adjustment washer	As needed	
	2402C-085	Adjustment washer	As needed	
14	Q150B1235TF2	Hexagon bolt	12	
	Q40512	Heavy spring washer	12	
15	2402C-110	Reducer housing assy, rear axle	1	
	2402C-115	Reducer housing, rear axle	1	
16	24C-01061	Gasket	1	
	2402C-315	Differential housing assy, bevel gear	1	
17	2402C-317	L. housing, differential	1	
18	Cancel			
19	32014	Tapered roller bearing	2	
20	2402C-381	Adjustment nut	2	
21	2402C-117	Bearing cover, differential	2	
	Q150B1470TF2	Hexagon bolt	4	
22	2402C-383	Stopper plate	2	
23	Cancel			
	Q150B0814	Hexagon bolt	4	
24	Cancel			
25	2402.80-336	Gear gasket, semi axle	2	
26	2402CJ-335	Semi axle gear	2	
27	2402C-331	Planetary gear shaft	1	
28	2402CJ-345	Planetary gear	4	
29	2402Q01-346	Washer, planetary gear	4	
30	2402C-318	R. housing, differential	1	
31	2402Q01-026	Driven bevel gear, rear axle	1	
	2402C-356	Bolt, driven bevel gear	12	
	Q341B12	I-type hexagon nut	12	

Rear brake assy.

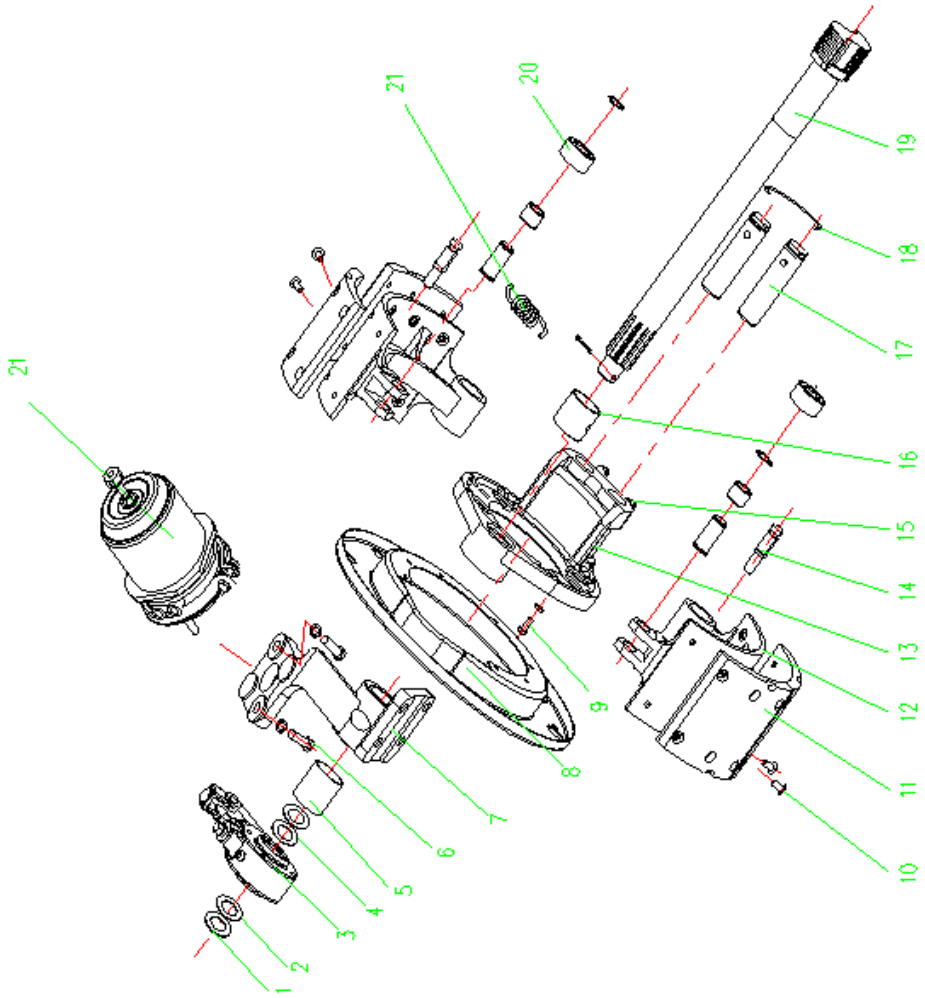

No.	Part No.	Part name	Qty.	Remark
1	3501C-046	Washer, brake cam	2	
2	35D-02047	Adjustment washer	As needed	
3	35D-02050-A	Adjusting arm assy, rear brake	2	
4	3501C-044	External adjustment washer	As needed	
5	3502.80Q-067F	Bushing, rear cam seat	2	
6	Q150B1230TF2	Hexagon bolt	4	
	Q40312	Spring washer	4	
7	35.80G-02132	Bracket, rear L. air chamber	1	
	35.80G-02133	Bracket, rear R. air chamber	1	
	35Q54-02140	0.05 thick washer, rear air chamber bracket	As needed	

	35Q54-02141	0.10 thick washer, rear air chamber bracket	As needed	
	35Q54-02143	0.50 thick washer, rear air chamber bracket	As needed	
8	3502Q54-051	Rear dustproof cover	2	
	35Q68-01038A	Rubber plug	4	
9	Q150B0610	Hexagon bolt	8	
	Q40306	Spring washer	8	
10	3501.80G-082	Rivet	48	
11	3502Q54-105	Brake shoe lining	8	
12	3502.61G-085	Fr. brake shoe	4	
	3501Q54-093	Bushing, brake shoe pin	4	
13	3502.31GS-016	Bottom plate, rear L. brake	1	
	3502.31GS-026	Bottom plate, rear R. brake	1	
14	3501.61G-108	Spring pin shaft	4	
15	3501.80Q2-134	Axle screw, brake shoe	4	
16	35.61QA-01039	Bushing, front air chamber bracket	2	
17	3501Q54-052	Pin shaft, front brake shoe	4	
18	Q50512200	Steel wire	2	
19	3502Q54-041	Rear L. brake cam	1	
	3502Q54-042	Rear R. brake cam	1	
20	Q43119	Spring washer, axle	4	
	3501.61G-111	Rolling wheel	4	
	3501.80G-109	Rolling wheel axle, brake shoe	4	
	3501.61G-095	Return spring	2	
21	3530.80RG35A-010	L. energy storage spring, brake chamber	1	
22	3530.80RG35A-020	R. energy storage spring, brake chamber	1	

Rear brake drum assy.

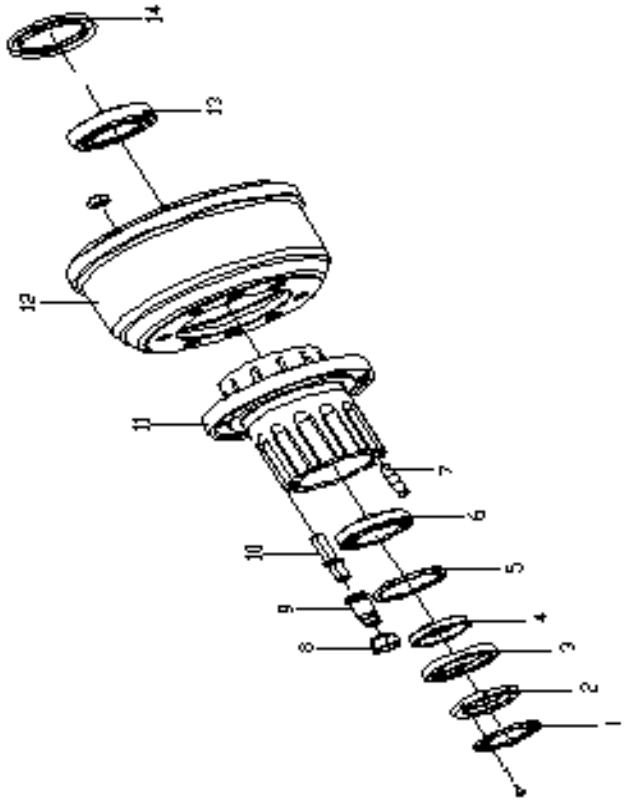

No.	Part No.	Part name	Qty.	Remark
1	24Q-01081B	Locking washer	2	
	Q2140512	Cross recessed pan head screw	6	
	Q40305	Spring washer	6	
2	24Q-01076	Inner nut, rear wheel hub bearing	2	
3	24T-01090	External oil seal assy. Rear wheel hub	2	
4	24Q-01084	External oil seal seat, rear wheel hub	2	
5	24.01-01083A	Bushing	2	
6	33113X2	Tapered roller bearing	2	
7	Q1211235	Stud	16	
8	31.91G135-03055	Wheel nut	6	
9				Without
10	31.61G171-04052	Bolt, rear wheel	6	

	31Q02-04057	Bolts and nuts, rear wheel	12	
11	31.61G165S-04015	Rear wheel hub	2	
12	35Q54-02075	Rear brake drum	2	
13	32214	Tapered roller bearing	2	
14	31Q02-04080-A	Inner oil seal assy. Rear wheel hub	2	

Rear brake drum assy.

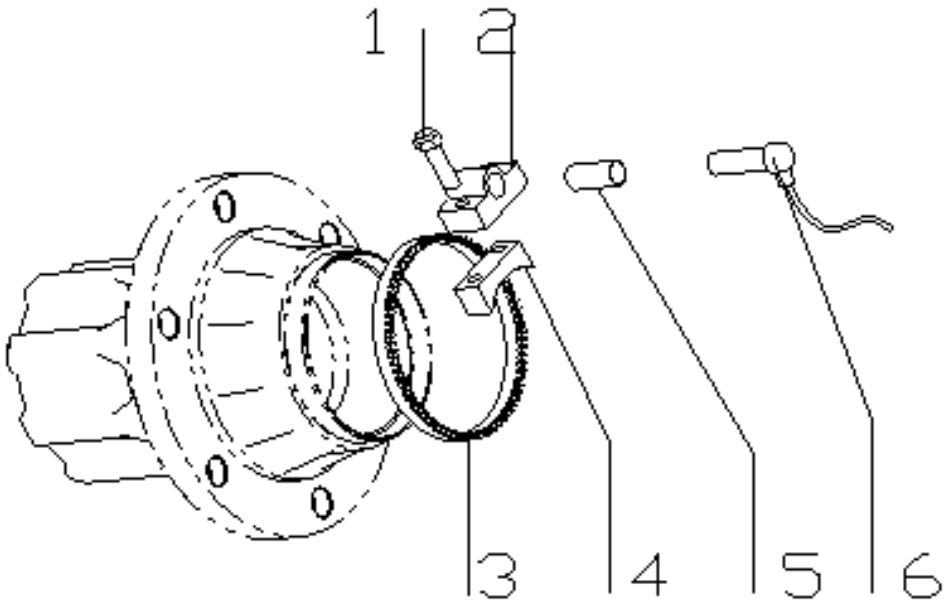

No.	Part No.	Part name	Qty.	Remark
1	Q150B0616	Hexagon bolt	4	
	Q40306	Spring washer	4	
2	3551.80S-118	Sensor bracket	2	
3	3551.80S-122A	Rear gear ring	2	
4				Within axle housing
5	3551.80S-113A	Clamp bushing	2	
6	3551.80S-121A	Rear sensor assy.	2	

Steering system

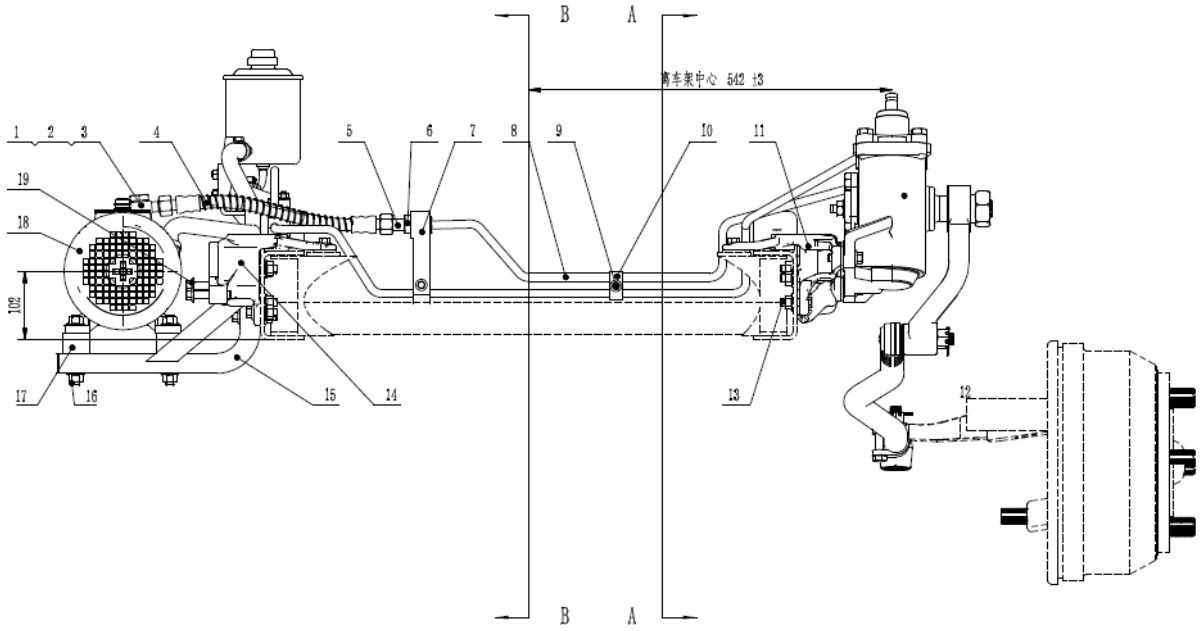

No.	Part No.	Part name	Qty.	Remark
1	Q72320	Seal washer	2	
2	34F23-12031	Bolt, articulated joint	1	
3	34F23-12030	Articulated joint	1	
4	34T31-10036	High pressure oil tube, steering	1	
5	Q813B12	Straight joint	1	
6	Q351B18	Hexagon thin nut	1	
7	34F03-06101	Bracket	1	
8	34F03-06002	Oil inlet tube	1	
9	Q1840840	Hexagon flange bolt, wide pole	1	
10	35D-06801	Dual-tube clip	2	
11	5002511T3130	L. Steering motor bracket	1	
12	3411010-ST01	Steering motor	1	
13	Q1841235	Hexagon flange bolt, wide pole	8	

14	5002512T3130	R. steering motor bracket	1	
15	34F15-03010	Steering pump bracket	1	
16	Q1201290	Double-headed stud	4	
17	EHPS-1010R1.5/17-2	Pad, EHPS	4	
18	EHPS-1010R1.5/16-2	EHPS	1	
19	Q1841255	Hexagon flange bolt, wide pole	6	

Steering system

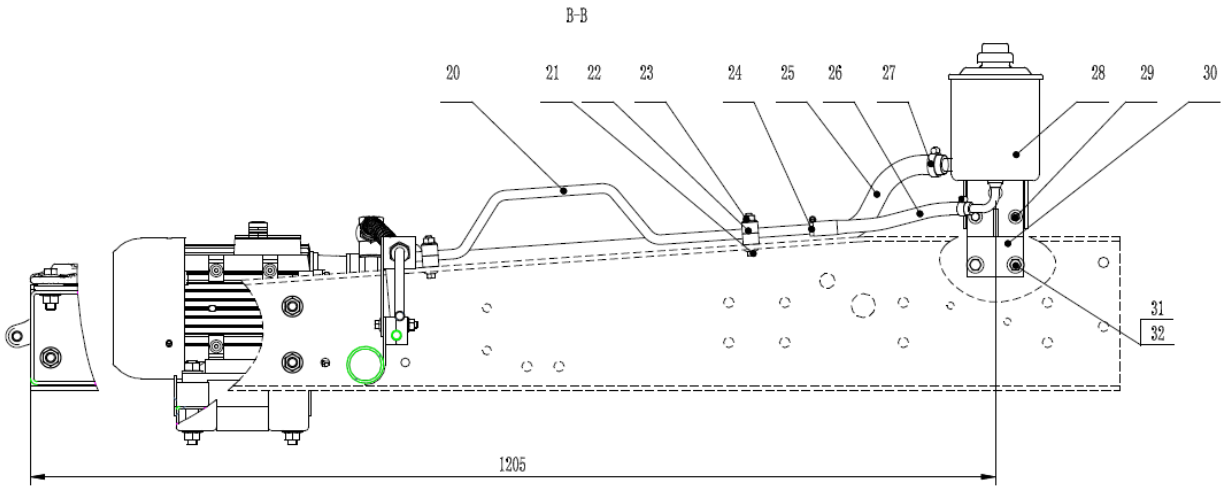

No.	Part No.	Part name	Qty.	Remark
20	34F03-06001	Oil return tube	1	
21	Q1840845	Hexagon flange bolt, wide pole	3	
22	35D-06805	Single tube clip	6	
23	Q32008	Hexagon flange nut	7	
24	Q67516	A-type worm tube clip	2	
25	34F01-05010	Oil inlet—oil reservoir to steel pipe	1	
26	34F15-05003	Low pressure oil return tube	1	
27	Q67527	A-type worm tube clip	2	
28	34F03-08010	Oil reservoir, steering	1	
29	Q1840820	Hexagon flange bolt, wide pole	3	
30	34F03-12015	Bracket, oil reservoir	1	
31	Q32010	Hexagon flange nut	2	
32	Q1841025	Hexagon flange bolt, wide pole	2	

Steering system

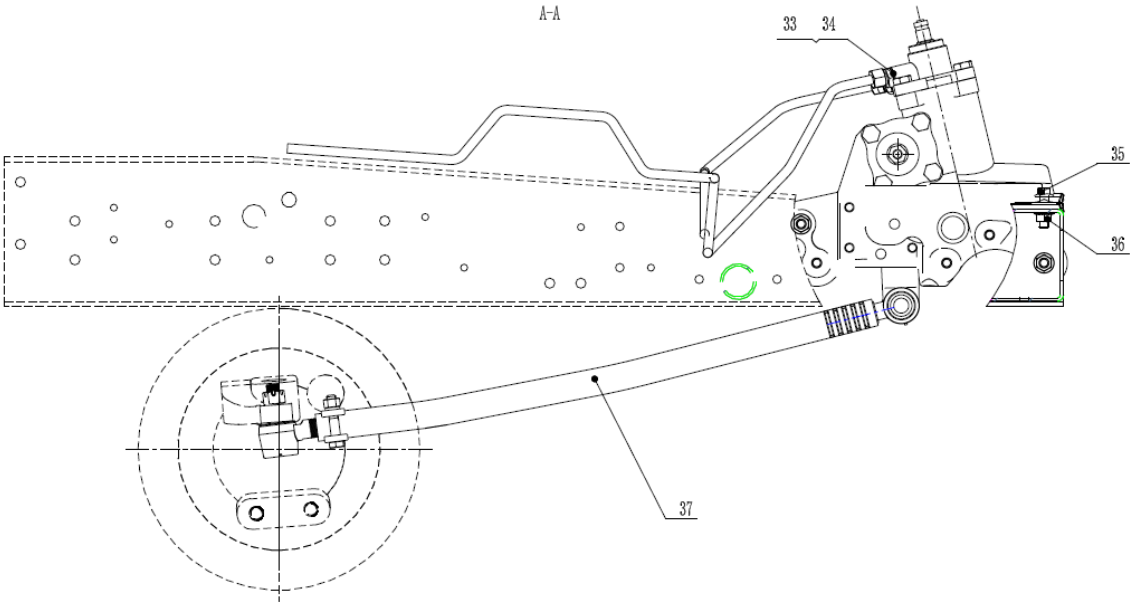

No.	Part No.	Part name	Qty.	Remark
33	35XB14-06001	Joint—oil inlet & outlet, steering motor	2	
34	Q72316	Seal washer	2	
35	Q1841240	Hexagon flange bolt, wide pole	8	
36	Q32012	Hexagon flange nut	4	
37	33F22-03010	Steering drag link assy.	1	

Electrical system

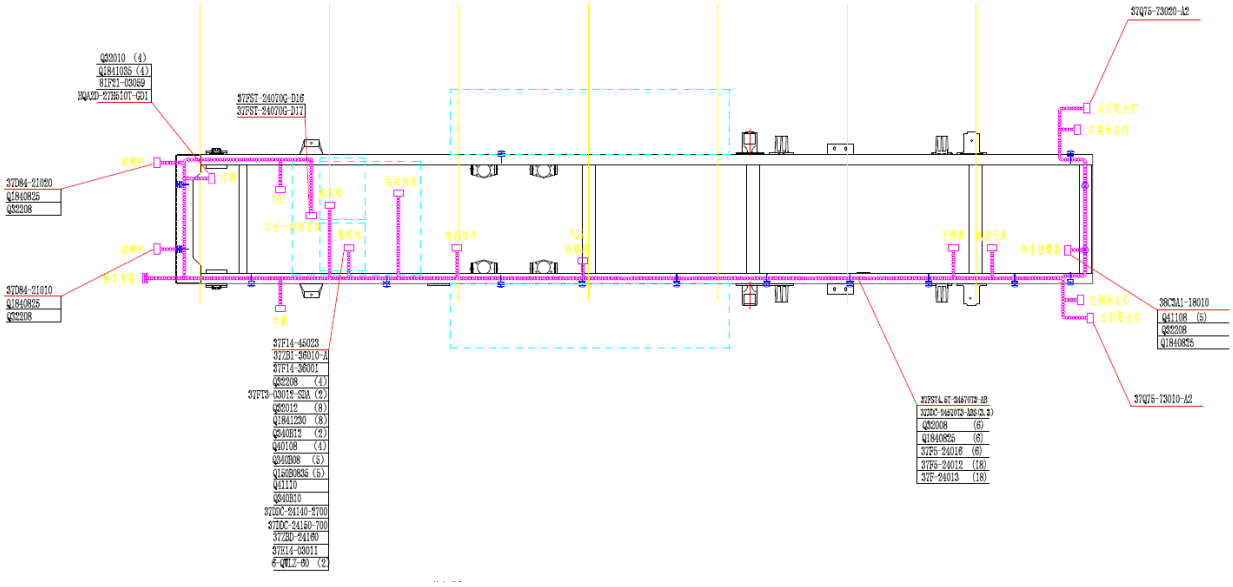

No.	Part No.	Part name	Qty.	Remark
1	37D84-21010	Electric horn assy. (Hi)	1	
2	37D84-21020	Electric horn assy. (Low)	1	
3	Q1840825	Flange bolt	2	
4	Q32208	Flange nut	2	
5	81F21-03059	Compressor bracket, electric air conditioner	1	
6	Q1841035	Flange bolt	4	
7	Q32010	Flange nut	4	
8	HQA2D-27H510T-GD1	Electric air conditioner system	1	
9	6-QWLZ-60	Battery assy.	2	
10	37E14-03011	Press plate	1	
11	37ZBD-24160	Battery connection wire	1	
12	37DDC-24150-700	Negative ground wire	1	
13	37DDC-24140-2700	Wire, battery to main switch	1	
14	Q340B10	Nut	1	
15	Q41110	Saw-teeth washer	1	
16	Q150B0835	Bolt	5	

17	Q340B08	Nut	5	
18	Q40108	Washer	4	
19	Q340B12	Nut	2	
20	Q1841230	Flange bolt	8	
21	Q32012	Flange nut	8	
22	37FT3-03012-SDA	Bar retractor	2	
23	Q32208	Flange nut	4	
24	37F14-36001	Main switch bracket	1	
25	37ZB1-36010-A	Main switch	1	
26	37F14-45023	Bracket, fast charging socket	1	
27	37Q75-73010-A2	L. rear lamp assy.	1	
28	37Q75-73020-A2	R. rear lamp assy.	1	
29	38C3A1-18010	Reverse/lifting buzzer	1	
30	Q1840825	Flange bolt	1	
31	Q32208	Flange nut	1	
32	Q41108	Saw-teeth washer	5	
33	37FST4.5T-24570T3-AB	Chassis wiring harness assy.	1	
34	37DDC-24570T3-ABS(3.3)	ABS harness assy.	1	
35	37F-24013	Harness strap	18	
36	37F5-24012	Plastic sleeve	18	
37	37F5-24016	Rubber shield	6	
38	Q1840825	Flange bolt	6	
39	Q32008	Flange nut	6	
40	37FST-24070G-D17	Controller ground harness assy.	1	
41	37FST-24070G-D16	Harness assy., 24V power supply to main switch	1	

Cooling system

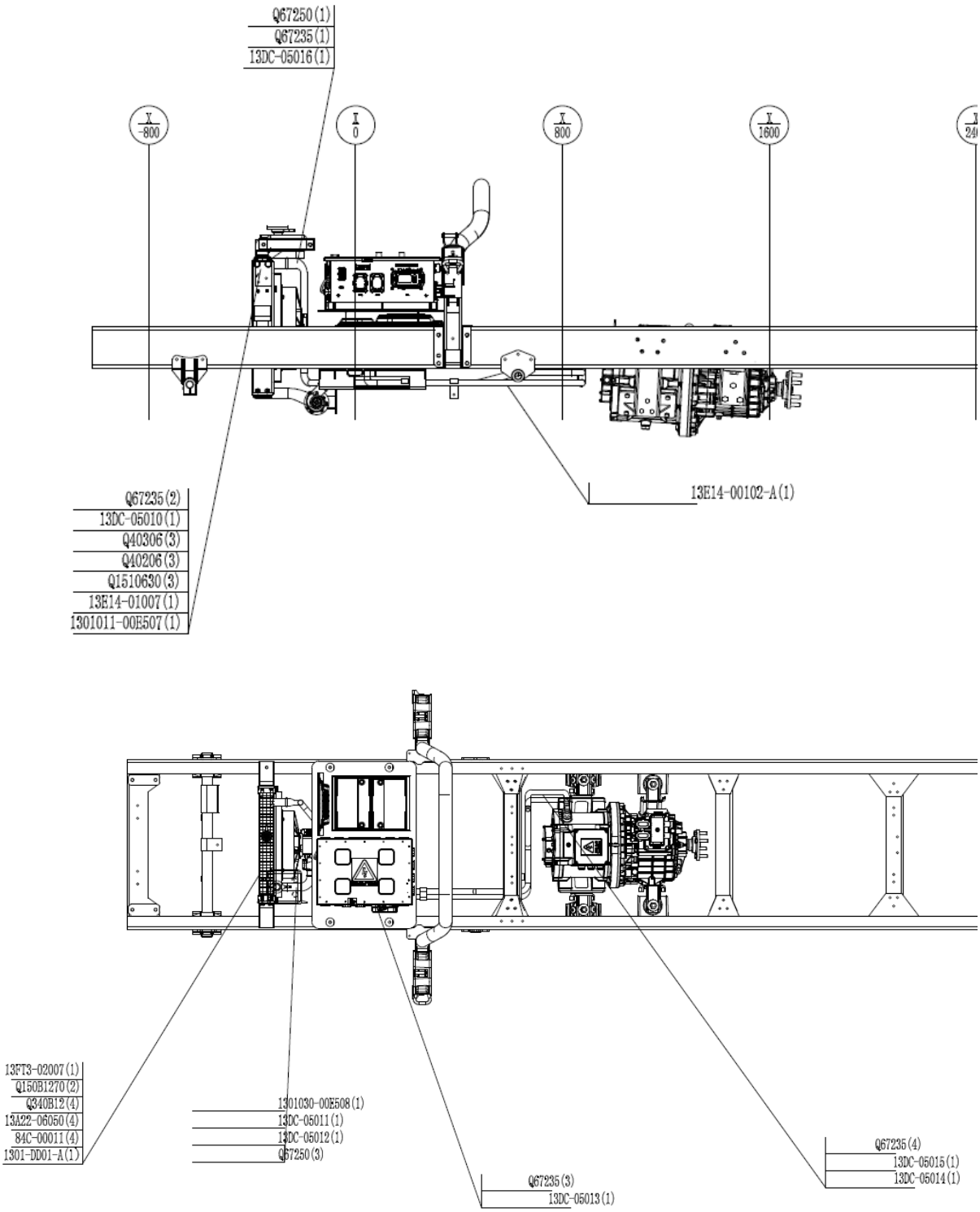

No.	Part No.	Part name	Qty.	Remark
1	1301-DD01-A	Motor cooling system	1	
2	13FT3-02007	Support pole, water tank	1	
3	84C-00011	Cushion	4	
4	13A22-06050	Big plain washer	4	

5	Q150B1270	Hexagon bolt	2	
6	Q340B12	Hexagon nut	4	
7	1301030-00E508	Water pump	1	
8	13DC-05011	Rubber tube	1	
9	13DC-05012	Rubber tube	1	
10	13DC-05013	Rubber tube	1	
11	13DC-05014	Rubber tube	1	
12	13DC-05015	Rubber tube	1	
13	13DC-05016	Rubber tube	1	
14	13DC-05010	Rubber tube	1	
15	13E14-00102-A	Transit steel pipe	1	
16	1301011-00E507	Auxiliary water tank	1	
17	13E14-01007	Bracket, auxiliary water tank	1	
18	Q1510630	Hexagon bolt	3	
19	Q40206	Hexagon nut	3	
20	Q40306	Spring washer	3	
21	Q67250	Double wire clamp	4	
22	Q67250	Double wire clamp	12	

Braking system

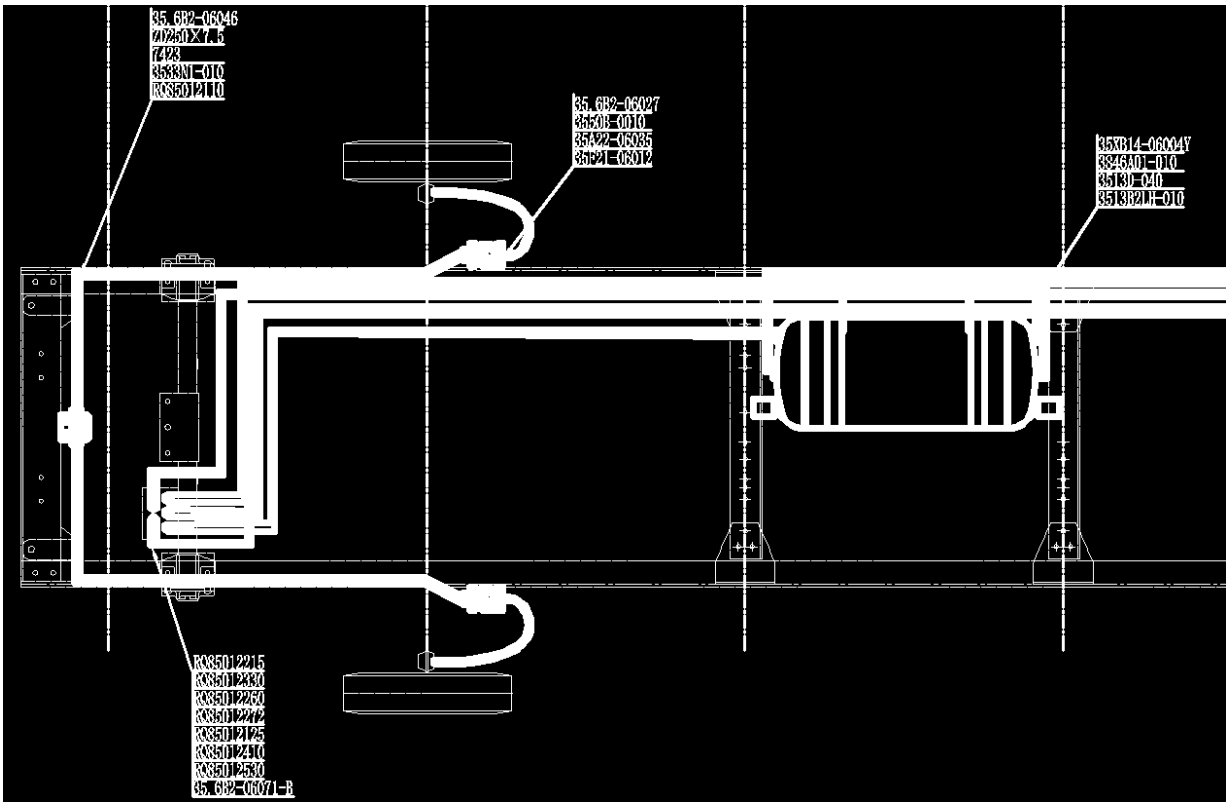

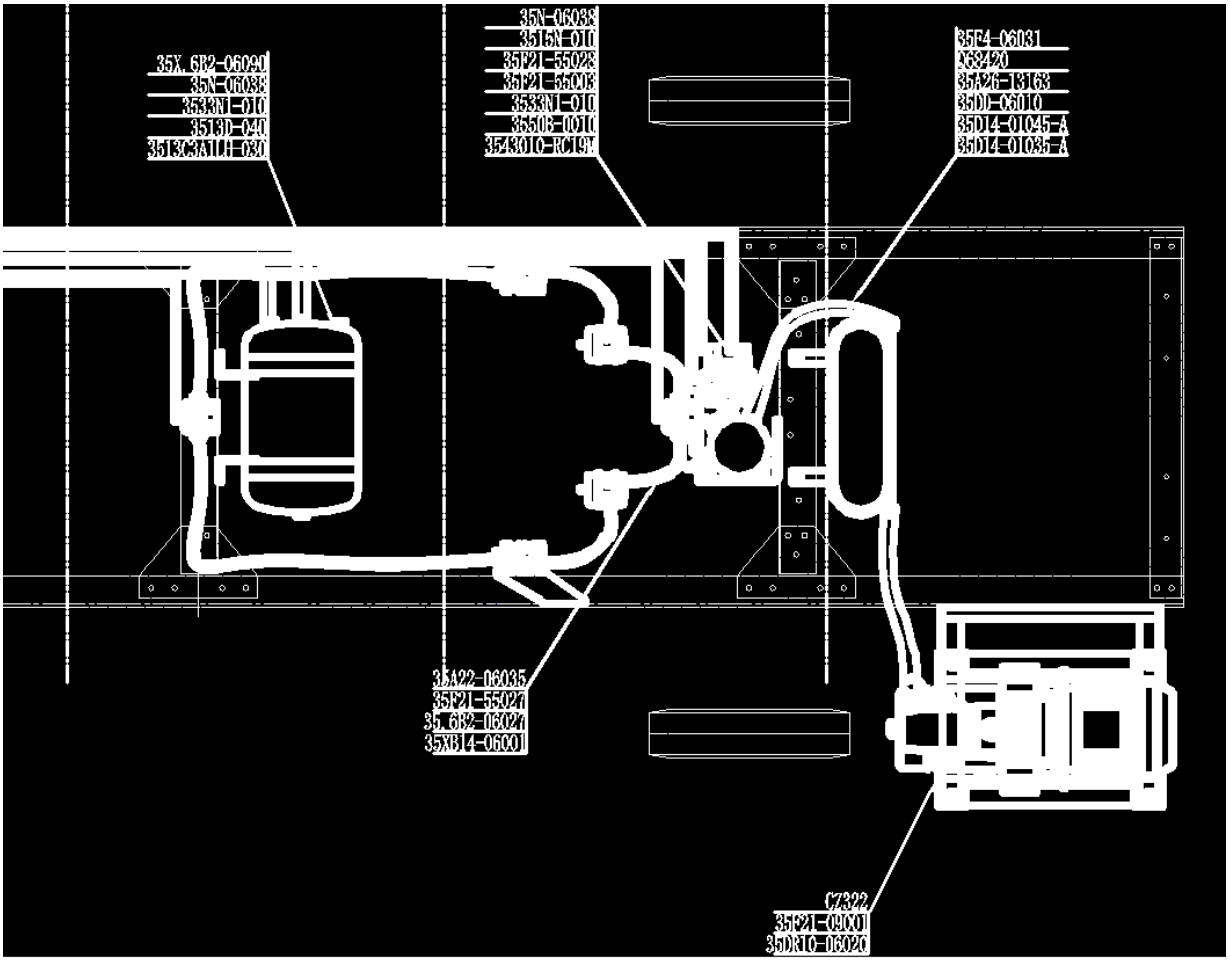

No.	Part No.	Part name	Qty.	Remark
1	RQ85012110	Nylon tube, front quick release valve to L &R ABS of front axle	2	
2	RQ85012215	Nylon tube, main valve to front air reservoir	1	
3	RQ85012330	Nylon tube, pressure retaining valve to front air reservoir	1	
4	RQ85012260	Nylon tube, pressure retaining valve to auxiliary air reservoir	1	
5	RQ85012272	Nylon tube, main valve to auxiliary air reservoir	1	
6	RQ85012125	Nylon tube, pressure retaining valve to rear air reservoir	1	
7	RQ85012410	Nylon tube, main valve to rear air reservoir, air inlet of rear brake	1	
8	RQ85012410	Nylon tube, main valve to rear quick release valve, rear brake signal	1	
9	RQ8501296	Nylon tube, rear quick release valve to L. & R. ABS of rear axle	2	
10	RQ85012530	Nylon tube, main valve to rear quick release valve, hand brake signal	1	
11	35D14-01035-A	Steel wire braided hose	1	
12	35D14-01045-A	Steel wire braided hose	1	
13	35A22-06035	Steel wire brake hose	6	
14	35A22-06060	Steel wire brake hose	1	
15	35A22-06065	Steel wire brake hose	3	
16	35DD-06010	Spiral iron pipe	1	
17	3543010-RC19M	Dryer	1	
18	3550B-0010	ABS valve	4	
19	3513B2LH-010	Air reservoir assy.	1	
20	3513C3A1LH-030	Air reservoir assy.	1	
21	3533N1-010	Quick release valve	3	
22	35F21-06012	Nylon tube	1	
23	35F21-06011	Nylon tube	1	
24	3513D-040	Water drainage valve	3	
25	35F21-55003	Dryer bracket	1	

26	CZ322	Air compressor assy.	1	
27	35F21-09001	Bracket, air compressor	1	
28	35F21-55027	Bracket, L. rear axle ABS bracket	1	
29	35F21-55028	Bracket, R. rear axle ABS bracket	1	
30	35A26-13163	Spiral iron tube bracket	2	
31	35F21-16103	Front quick release valve bracket	1	
32	35N-06038	Plug	5	
33	35DR10-06020	M22 straight joint (to connect with air tube of Ø18)	6	
34	35.6B2-06027	M22 elbow joint (to connect with air tube of Ø18)	4	
35	35F4-06031	Elbow joint	3	
36	Q81312	Air tube joint	6	
37	35.6B2-06071-B	M18 elbow joint (to connect with air tube of Ø16)	2	
38	35X.6B2-06090	Elbow joint	4	
39	35XB14-06004Y	Elbow joint	2	
40	35XB14-06001	Straight joint	3	
41	35XB14-06002	Straight joint	5	
42	QX63012	Straight joint	1	
43	Q351B18	Hexagon nut	7	
44	35N-06048-Y	M18 straight joint (to connect with air tube of Ø16)	4	
45	Q150B0880	M8 bolt	8	
46	Q1840825	M8 flange bolt	2	
47	Q1841230	M12 flange bolt	21	
48	Q1841260	M12 flange bolt	4	
49	Q32012	M12 flange nut	25	
50	Q1840835	M8 flange bolt	5	
51	Q32008	M8 flange nut	15	
52	35.6B2-06046	Wiring shield	2	
53	ZD250X7.5	Strap	5	
54	7243	Thread sealing glue	1	
55	Q68420	Dual tube clip	10	
56	3846A01-010	Air pressure sensor	2	
57	3515N-010	Pressure retaining valve assy.	1	
58	35X.6B2-06027	Straight joint	1	

Air compressor assy.

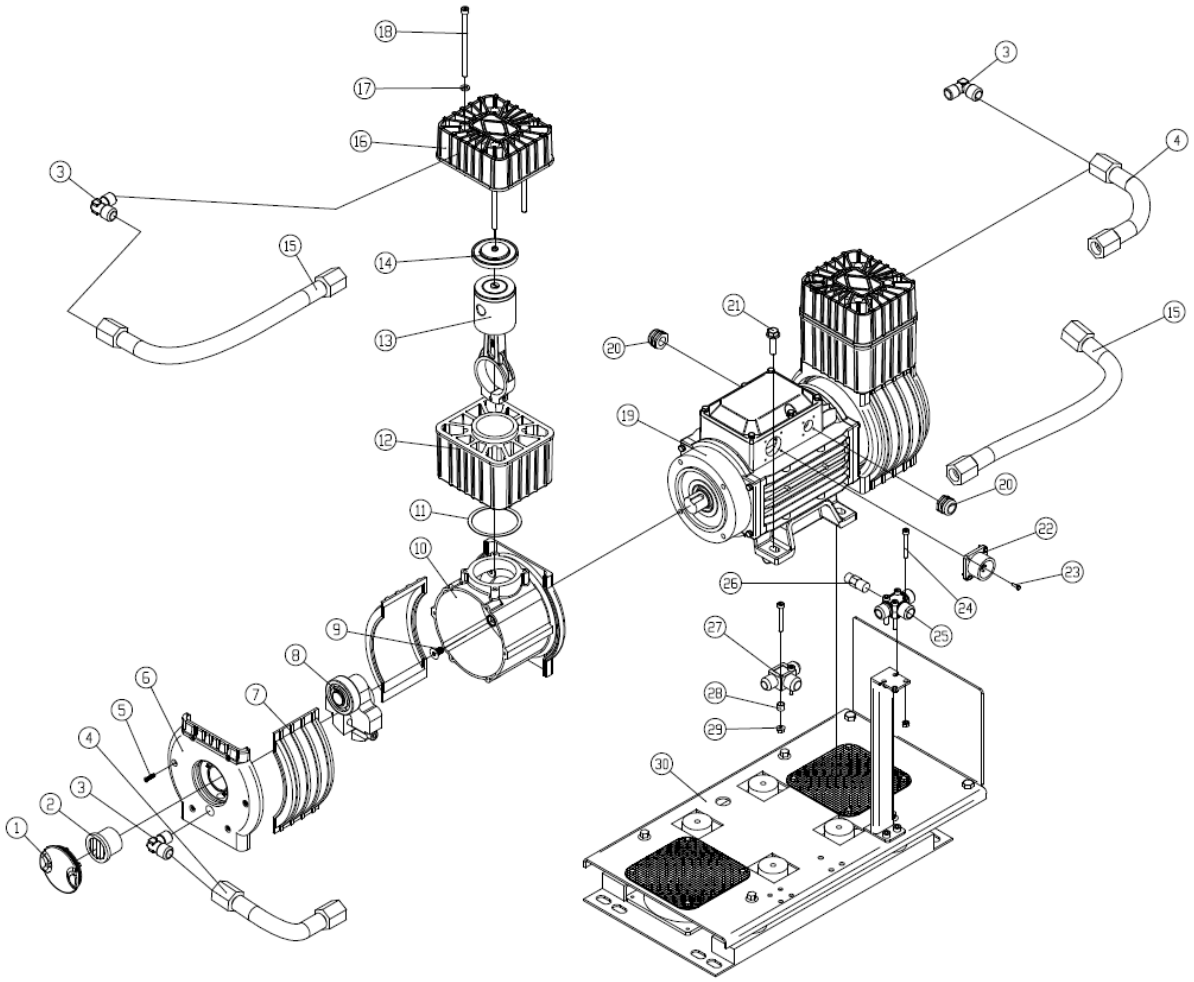

No.	Part No.	Part name	Qty.	Remark
1	1434330105	Muffling cover	2	
2	2142330102	Fine filter element	2	
3	1414000101	Air outlet joint	4	
4	1120150101	210 air tube assy.	2	
5	2122000103	Cross recessed pan head screw M4x16	12	
6	2112330101	V2 side cylinder cover assy.	2	
7	2142330101	V2 wind scooper	4	
8	2312330101	V2 open eccentric gear assy.	2	
9	1434330104	Inner hexagon recessed screw M8x16	8	
10	2142330104	V2 crankcase	2	
11	1144030301	Cylinder gasket	2	
12	1434310108	Cylinder	2	
13	1314320101	Piston connecting rod assy.	2	
14	1312310101	Piston connecting rod assy.	2	

15	1414000126	410 air tube assy.	2	
16	1314310101	Temperature sensor cylinder cover assy.	2	
17	1434310104	Spring washer M6	8	
18	1434310103	Inner hexagon bolt M6x105	8	
19	2122000111	V2 motor assy.	1	
20	1414000104	Cable gland	2	
21	2122000101	Hexagon flange bolt M8x20	6	
22	1414000121	Aerial plug	1	
23	1414000105	Inner hexagon screw M3x12	4	
24	1414000102	Inner hexagon screw M5x45	6	
25	1142010201	T-shape four-joint	1	
26	1414000115	Safety valve	1	
27	1414000106	Air inlet Tee	1	
28	1414000119	Circular column	2	
29	1414000103	Hexagon flange nut M5	6	
30	2112050102	Seat, air compressor	1	